A Griswold Controls LLC./FlowCon International Company

Installation and Operation Instruction

The **FlowCon SM** are available in two different double union end connected models covering five different sizes and four different flanged models covering nine different sizes:

① FlowCon SM.1 DN15-25 (1/2”-1”)
② FlowCon SM.2 DN25-40 (1”-1½”)
③ FlowCon SM.3 DN50-80 (2”-3”)
④ FlowCon SM.4 DN80-100 (3”-4”)
⑤ FlowCon SM.5 DN125-150 (5”-6”)
⑥ FlowCon SM.6 DN200-250 (8”-10”)

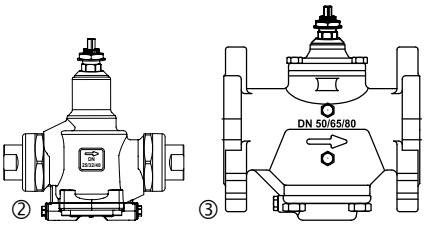

O-rings are supplied with the valve body and are used to seal the connections. It is recommended to grease the O-rings with silicone grease.
Please make sure these are properly placed in the O-ring grooves on valve inlet and outlet, before installing the housing. Please note that FlowCon SM.6 (DN200-250 / 8”-10”) contains two O-ring grooves. Use the inner groove for DN200 / 8” flanges and outer groove for DN250 / 10” flanges.

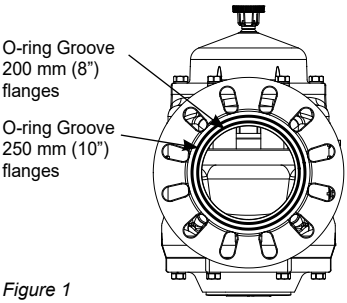

Figure 1

The **actuator types** FlowCon SM.0.0.0.3, SM.0.0.0.4 and SM.0.0.0.6 are electrical programmable actuators. SM.0.0.0.6 is a BACnet actuator and has a supplementary instruction on BACnet connection and programming.

Fitting and Re-fitting the actuator

It is recommended to grease the O-ring on the spindle adaptor with silicone grease before placing the spindle adaptor on the valve spindle. ❶ Then place the actuator on the spindle adaptor and place the three actuator “legs” into the three holes in the mounting bracket (figure 2 and 3). Make sure that the snap ring is clicked onto the mounting bracket, so that the snap ring is locked at the top of the mounting bracket, but still able to rotate. ❷ Then finger-turn the snap ring counter clockwise (upside view) approximately 1/6 of a turn until its stop points touch the actuator “legs” and the mounting is lock with a (small) click. Do not use additional tools.

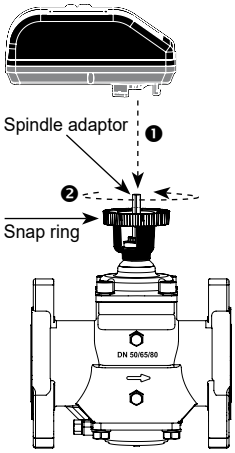

Figure 2

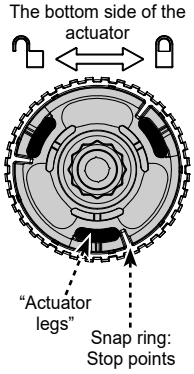

Figure 3

In case the actuator will have to be removed, it is recommended to electrically open the valve for easier removal. Hereafter reverse the procedure and ❸ turn the snap ring clockwise until the actuator is loosened and ❹ lift the actuator up. Again, no need for additional tools.

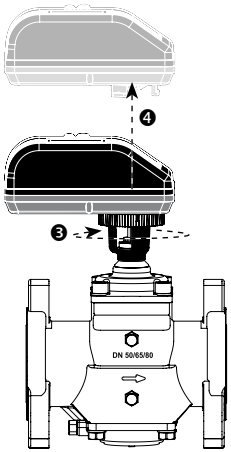

Figure 4

Do not remove cover from actuator.
Opening cover will void warranty.

Orientation

Upside-down installation is allowed along with the standard horizontal and vertical installation (figure 5).

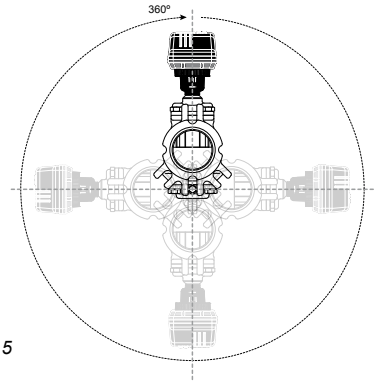

Figure 5

Wiring

If feedback signal is not required, leave green wire detached.

Remember to remove the protection film from the actuator display to avoid condensation.

FlowCon SM (analog)

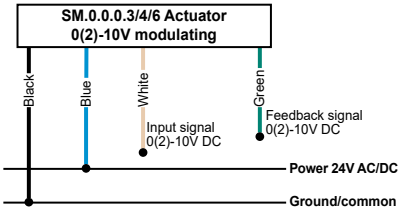

FlowCon SM (digital)

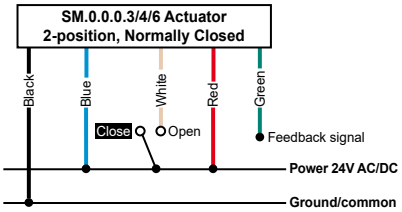

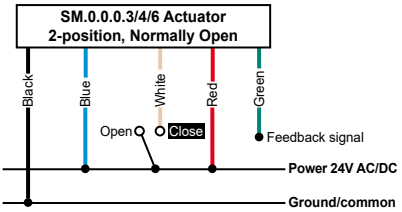

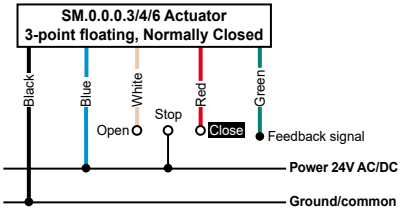

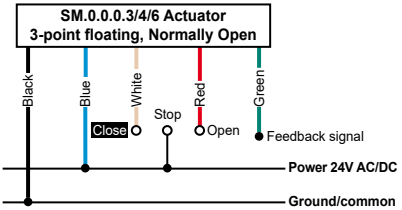

Start-Up Sequence

When power is turned on, the actuator will automatically calibrate to determine closing point of the valve. Calibration can take up to 10 minutes depending on the valve’s position at start-up. During calibration actuator display will show “CAL”. Hereafter it will procced to normal operation mode (according to control signal).

If no control signal is detected, flush is started if enabled in the programming menu (enabled by default), opening the valve to 5/6 of fully open. Actuator display will show “FLUSH” until control signal is detected.

At first start-up please enter programming menu to set actuator settings.

Programming Menu

The programming menu is always accessible. To enter the programming menu, **simultaneously press ⇦ and ⇨ for 6 seconds,** until bottom line in display blinks.

To change a value, press △ or ▽. For quick scroll through values hold down △ or ▽. Press ⇨ to accept a value and go to next step and press ⇦ to go to previous step.

For fast menu exit press ⇦ and ⇨ simultaneously for 6 seconds. The actuator will automatically return to normal operation mode if no action is detected on arrow keys for 1 minute.

All values selected in the programming menu are stored in non-volatile memory.

Step	Display	Description	Values
0	* ENTER 0000000	Password. **scrolling top:* ENTER PASSWORD	**Disabled by default** Password: 3569266. *Only if Enabled (in step 11).* Change one digit at a time, press ⇨ and ⇦ to move between digits. At last digit, press ⇨ to go to next step.
1	* LANG EnGLIS	Select language. **scrolling top:* SELECT LANGUAG	Default: English. Possibility to choose other languages later on (not currently an option).
2	* VALVE SM 1.0.0	Select valve model onto which the actuator is installed. **scrolling top:* SELECT VALVE MODEL	Default: SM.0.0. Select from the 10 available valve models. Options: SM.1.1, SM.2.1...
3	* UNIT L/sec	Choose unit scale for flow rate. **scrolling top:* SELECT UNIT SCALE	Default: l/sec. Options: l/sec or l/hr or GPM.
4	* FLUSH EnAbLE	Activate Flush mode at start-up. **scrolling top:* SELECT FLUSH MODE	Default: Enable. Options: Enable or Disable. *When no control signal (analog) is detected at start up, flush mode is started (5/6 of fully opened). It will be dismissed when control signal is detected.*
5	* SIGNAL 2-10 Vdc	Select type of control signal. **scrolling top:* SELECT CONTROL SIGNAL	Default: 2-10VDC. Options: 2-10VDC or 4-20mA or digital. Choose: • 2-10VDC for VDC • 4-20mA for mA • Digital for 2 position or 3 point floating.

Step	Display	Description	Values
6	* MINIMUM 2.00 Vdc	Select minimum control value. **scrolling top:* SET MINIMUM LIMIT	Volt default: 2. Options: from 0-7. Increment: 0.1. mA default: 4. Options: from 0-14. Increment: 0.2. *NA if Digital (in step 5).*
7	* MAXIMUM 10.00 Vdc	Select maximum control value. **scrolling top:* SET MAXIMUM LIMIT	Volt default: 10. Options: from 3-10 and at least 3 VDC greater than the selected minimum limit. Increment: 0.1. mA default: 20. Options: from 6-20 and at least 6 mA greater than the selected minimum limit. Increment: 0.2. *NA if Digital (in step 5).*
8	* FEEDBAC AU	Select feedback signal. **scrolling top:* SELECT FEEDBAC SIGNAL	Default: AU; Automatic match of control signal if analog. Options: 0-10 VDC, 2-10 VDC or 4-20 mA or AU. *If Digital (in step 5) AU is not an option.*
9	* FLOW 0.685 L/sec	Set the designed maximum flow. Accuracy: Greatest of either ±5% of designed max. flow or ±2% of max. valve flow. **scrolling top:* SELECT MAXIMUM FLOW	Default: Maximum setting. Values depend on valve model and unit scale chosen in step 2 and 3. Stepping increments as per tech note.
10	* ROTATIO NO	Select direction of rotation. **scrolling top:* SELECT ROTAT DIRECT	Default: Normally Closed (NC). Options: Normally Open (NO) or Normally Closed (NC).
11	* ACTUAT, LIN FLO	Select actuator mode. **scrolling top:* ACTUATOR MODE	Default: Linear flow. Options: Linear flow, Equal percentage, Linear rotation or Linear signal. For SM.1 and SM.2 only linear flow and linear rotation will apply.
12	* PASS ENABLE	Activation of password. **scrolling top:* ACTIVAT PASSWORD	Default: Disable. Options: Enable or Disable. If Enabled password is required to access alarm and programming menu.
13	* FAILSAF OPEN	Select direction of rotation when Failsafe. **scrolling top:* SELECT FAIL SAFE DIRECT	Default: Closed. Options: Open or Closed. *Only valid for SM.0.0.0.4 (failsafe model). Failsafe direction open means opening to max. flow chosen in step 9.*

In Operation

Display	Description	Values
L/hr GPM L/sec mAVdc	Indicates unit scale system.	l/sec or l/min or GPM. mA or VDC.
	Indicates battery level.	Basic version with no battery (SM.0.0.0.3) Failsafe version with battery (SM.0.0.0.4) Battery level low, charging needed. Medium battery level. Battery charged.
⚠	Alarm indicator.	*Blinking if actuator is still functional (warning).* *Fully on if actuator is not working (critical).*

0.214 L/sec

Information

CONTROL SIGNAL 2.0 VDC
FEEDBAC SIGNAL 2.0 VDC
VALVE SM. 3.1
PRESSUR RANGE 30-800 KPAD
MAXIMUM FLOW RATE 6.580 L/SEC
OPERAT DIRECT NC
ACTUAT.MODE LIN FLO
FAIL SAFE DIRECT CLOSE
ERROR CODE 01

SM.0.0.0.3/4

T1 50C
T2 30C
DT 20.0
DP100KP

SM.0.0.0.5/6

Current flow rate[1].
Indicates current flow rate in l/sec, l/hr or GPM.

Use ⇨ to go to next information line and ⇦ to go to the previous.

Information		
Control signal	Indicates value of control signal	0-10 VDC or 0-20 mA or Open/Stop/Close
Feedback signal	Indicates value of feedback signal	0-10 VDC or 0-20 mA
Valve	Indicates valve model	SM.1.1, SM.2.1...
Pressure range	Indicates pressure range.	32-320 kPaD, 40-320 kPaD.....
Maximum flow rate	Indicates selected maximum designed flow rate	Depends on valve etc. l/sec, l/hr or GPM
Operational direction	Indicates direction of rotation	NO or NC
Actuator mode	Indicates control mode	Linear flow, Equal percentage, Linear rotation or Linear signal
Failsafe direction	Indicates failsafe direction	Open or Closed *Valid for failsafe actuator models*
Critical Alarm	Indicates alarm error code	01, 03, 05 (without failsafe) or 06 *Only if critical alarm is present*

Note 1: The flow rate shown on the actuator display is a calculated value. Flow rates below 1.0 valve rotation is shown as indications, illustrated with an apostrophe in front of the flow rate. If display shows “NA” the valve model has not been chosen in programming menu step 2.

Alarm Menu

To enter the alarm menu, **simultaneously press △ and ▽ for 6 seconds**. The alarm menu is only accessible if an alarm is present (i.e. when the icon ⚠ is displayed). Press ⇨ to go to the next alarm display and press ⇦ to go to previous.

For fast menu exit press △ and ▽ simultaneously for 6 seconds. The actuator will automatically return to normal operation mode if no action is detected on arrow keys for 1 minute.

If the actuator is still **functioning** (= warning code 02, 04, 05 with failsafe and 07 with failsafe), the ⚠ icon will blink. If the actuator is **NOT functioning** (=error code 01, 03, 05, 06 with failsafe and 08), the ⚠ icon is fully on. Error codes will be shown in the information part of the actuator display.

Display	Description	Action
ERROR 01	Alarm.	
ENTER 00000000	Enter password.	If enabled in programming menu step 11 Disabled by default. Password: 3569266.

Code	Icon	Description	Details
01	⚠ **FULL ON**	Valve/actuator is overtorqued.	Operation is stopped. Actuator will retry operation every 4 minutes. If over torque condition disappear, error will convert to error code 02.
02	⚠ **BLINKING**	Actuator has reached its torque limit in the past.	Actuator is functioning. To reset the alarm simultaneously press △ and ⇦ for 6 seconds.
03	⚠ **FULL ON**	Critical - over temperature.	Critical: Temperature in actuator is at least 70ºC, motor operation is stopped. If temperature is decreasing, operation will resume.
04	⚠ **BLINKING**	High temperature.	Actuator is still functioning. Temperature in actuator is at least 50ºC as limited according to tech note. If temperature is decreasing, operation will resume.
05	⚠ **FULL ON**	No Failsafe: Power supply not in range.	Operation is stopped. Alarm will automatically reset when voltage is back in range.
	⚠ **BLINKING**	With Failsafe: Power supply not detected / not in range.	Failsafe is activated. Alarm will automatically reset when voltage is back in range.
06	⚠ **FULL ON**	Control signal not detected.	Operation is stopped. Alarm will automatically reset when control signal is back in range.
07	⚠ **BLINKING**	Battery error.	Battery is not properly connected. Alarm will reset when battery is properly connected. *Only valid for failsafe actuators.*
08	⚠ **FULL ON**	BACnet fallback mode	BACnet control value has not been updated and BACnet fallback timeout has been reached. Alarm will reset when BACnet control signal is refreshed. *Only valid for BACnet actuators.*

Auto-stroke sequence

In case the valve does not operate as expected, start the auto-stroke sequence to re-calibrate the closing point making sure that the actuator is able to open the valve fully. Press ⇨ and △ simultaneously for 6 seconds to start auto-stroke. An auto-stroke sequence cannot be cancelled. During auto-stroke actuator display will show “AUTO STROKE CYCLES”. Hereafter it will proceed to normal operation mode (according to control signal). If the actuator is not able to open valve fully, error code 01 will be displayed.

Manual Override

Manual override is used to temporarily set the valve position regardless the settings and control signal for the actuator. Disconnect power to the actuator and remove the actuator from the valve. Turn the valve spindle clockwise to close valve and counter-clockwise to open. Re-mount the actuator and connect power. Be aware to protect that actuator from water while not on the valve.

When manually operating the vale (actuator disconnected) do not use more than 10 Nm torque. Use of higher torque will void warranty.

Failsafe Mode

In case of power failure, failsafe models will move actuator to the position chosen in programming menu step 13 and show warning code 05 in the actuator display. When voltage is back in range ⚠ will be reset.