Installation and Operation Instruction

The **FlowCon Composite** inserts are used with three different FlowCon valve housings:

① FlowCon A DN15-25 (1/2”-1”)
② FlowCon AB DN15-32 (1/2”-1 1/4”)
③ FlowCon ABV DN15-40 (1/2”-1 1/2”)

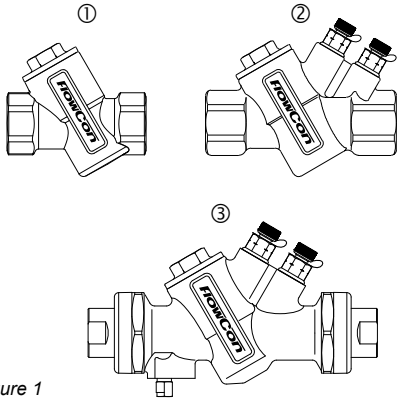

Figure 1

Insert Setting and Installation

Prior to installing the FlowCon Composite insert (supplied from factory in setting 2) in the valve housing, the system should be properly flushed. Blank valve covers are available to be installed during flushing. Such flushing caps can be identified by the absence of a letter stamp.

The letters Y, G, X, C or D identify covers including a composite insert. These stamped letters on the cover identify the ΔP range and the numeric adjustment setting at the bottom on the insert and the color of the orifice cup identify the specific flow rate through the composite insert. Flow setting can only be done before the insert is installed in the valve housing. A 6 mm Allen key is used to adjust the orifice cup to the required number for the required flow rate. The opening on the “number plate” should point directly at the desired number (figure 3, 4 and 5).
It is recommended to grease the O-rings located around the Composite with silicone grease before installing the insert in the valve housing.

General Assembly Drawing FlowCon Composite

A: Valve housing
B: FlowCon Composite insert
C: Allen key
D1: P/t plug (2 pcs.)
D2: Plug (2 pcs.)
E: Union end connections
F: Adjustment Key

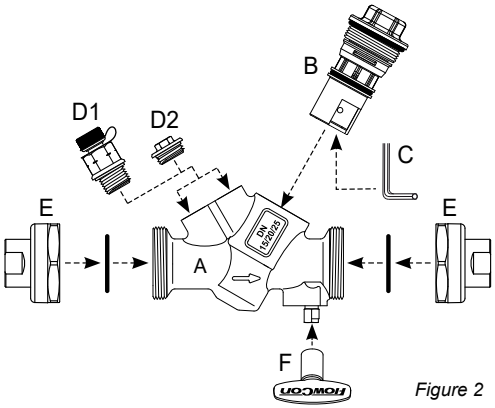

Figure 2

A Griswold Controls LLC./FlowCon International Company

FlowCon Composite Inserts 20 mm, for valves DN15/20/25 - Y-TYPE

20mm · 3/4” · Composite insert · Y-type								
Pressure range, ΔP: 20-130 kPaD (15-130 kPaD)* · 2.9-18.9 psid (2.2-18.9 psid)*								
			Model no.	ABV1.Y.Y	ABV1.Y.R	ABV1.Y.U	ABV1.Y.B	ABV1.Y.G
Nominal flow rate	l/sec	l/hr	GPM	Grey*	Red	Blue	Black	Green
	0.0081	29.2	0.128	1				
	0.0133	47.9	0.211	2				
	0.0175	63.0	0.277	3				
	0.0222	79.9	0.352	4				
	0.0311	112	0.493	5				
	0.0353	127	0.560	6				
	0.0383	138	0.607	7				
	0.0431	155	0.683	8				
	0.0450	162	0.713				3	
	0.0575	207	0.911		4			
	0.0619	223	0.981			4		
	0.0669	241	1.06				4	
	0.0922	332	1.46		5			
	0.0978	352	1.55					1
	0.105	378	1.66		6			
	0.114	409	1.80		7			
	0.115	415	1.83			5		
	0.118	426	1.88					2
	0.119	430	1.89		8			
	0.136	489	2.15					3
	0.137	492	2.17			6		
	0.138	498	2.19					4
	0.146	524	2.31			7		
	0.146	526	2.32			8		
	0.155	557	2.45				5	
	0.176	635	2.80				6	
	0.180	647	2.85				7	
	0.193	695	3.06				8	
	0.231	830	3.66					5
	0.237	854	3.76					6
	0.253	909	4.00					7
	0.273	984	4.33					8

Accuracy: Greatest of either ±10% of controlled flow rate or 20 l/hr (0.0056 l/sec or 0.088 GPM).

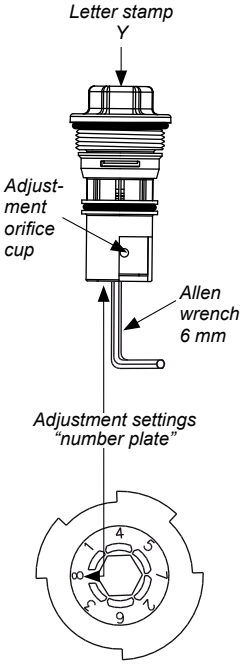

Figure 3

Use a 6 mm Allen key for adjusting the flow rate.

A setting of **8**,
in a red insert with **Y** stamping indicates a 20 mm (3/4”) insert with a flow rate of:

0.119 l/sec (1.89 GPM)
in a ΔP range of 20-130 kPaD (2.9-18.9 psid)

A Griswold Controls LLC./FlowCon International Company

FlowCon Composite Inserts 20 mm, for valves DN15/20/25 - G-TYPE

20mm · 3/4” · Composite insert · G-type								
Pressure range, ΔP: 40-400 kPaD (30-400 kPaD)* · 5.8-58 psid (4.4-58 psid)*								
			Model no.	ABV1.G.Y	ABV1.G.R	ABV1.G.U	ABV1.G.B	ABV1.G.G
Nominal flow rate	l/sec	l/hr	GPM	Grey*	Red	Blue	Black	Green
	0.0117	42.1	0.185	1				
	0.0189	68.0	0.300	2				
	0.0247	88.9	0.392	3				
	0.0325	117	0.515	4				
	0.0472	170	0.748	5				
	0.0528	190	0.837	6				
	0.0564	203	0.894			3		
	0.0597	215	0.946				3	
	0.0639	230	1.01	7				
	0.0694	250	1.10	8				
	0.0781	281	1.24		4			
	0.0908	327	1.44			4		
	0.0958	345	1.52				4	
	0.137	493	2.17		5			
	0.147	529	2.33					1
	0.161	581	2.56		6			
	0.173	624	2.75		7			
	0.181	652	2.87			5		
	0.181	653	2.88		8			
	0.186	670	2.95					2
	0.210	755	3.32					3
	0.216	779	3.43			6		
	0.218	785	3.46			7		
	0.220	792	3.49			8		
	0.237	853	3.75				5	
	0.241	869	3.83					4
	0.266	957	4.21				6	
	0.269	968	4.26				7	
	0.277	998	4.39				8	
	0.365	1320	5.79					5
	0.369	1330	5.85					6
	0.392	1410	6.21					7
	0.408	1470	6.46					8

Accuracy: Greatest of either ±10% of controlled flow rate or 20 l/hr (0.0056 l/sec or 0.088 GPM).

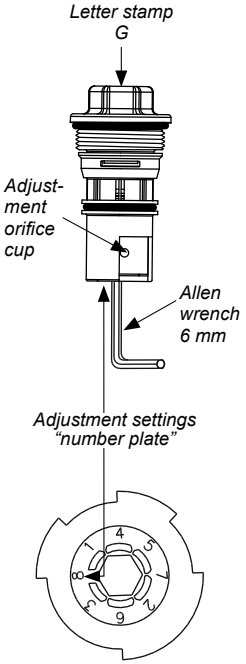

Figure 4

Use a 6 mm Allen key for adjusting the flow rate.

A setting of **8**,
in a red insert with **G** stamping indicates a 20 mm (3/4”) insert with a flow rate of:

0.181 l/sec (2.88 GPM)
in a ΔP range of 40-400 kPaD (5.8-58 psid)

FlowCon Composite Inserts 40 mm, For valves DN25/32/40 - X-type, C-type and D-type

40mm · 1 1/2” · Composite insert · **X-type**					
Pressure range, ΔP: 15-130 kPaD · 2.2-18.9 psid					
			Model no.	ABV2.X.W	ABV2.X.R
	l/sec	l/hr	GPM	White	Red
Nominal flow rate	0.17	612	2.69	1	
	0.23	828	3.64	2	
	0.26	936	4.12		1
	0.33	1190	5.23	3	
	0.38	1370	6.02	4	
	0.39	1400	6.18		2
	0.48	1730	7.61	5	3
	0.54	1940	8.56	6	
	0.62	2230	9.83	7	
	0.63	2270	9.99		4
	0.66	2380	10.5	8	
	0.67	2410	10.6		5
	0.76	2740	12.0		6
	0.85	3060	13.5		7

Accuracy: Greatest of either ±10% of controlled flow rate or 20 l/hr (0.0056 l/sec or 0.088 GPM).

40mm · 1 1/2” · Composite insert · **C-type**					
Pressure range. ΔP: 22-300 kPaD · 3.2-43.5 psid					
			Model no.	ABV2.C.W	ABV2.C.R
	l/sec	l/hr	GPM	White	Red
Nominal flow rate	0.23	828	3.65	1	
	0.31	1120	4.91	2	
	0.38	1370	6.02		1
	0.42	1510	6.66	3	
	0.47	1690	7.45	4	
	0.50	1800	7.93		2
	0.60	2160	9.51	5	
	0.64	2300	10.1		3
	0.68	2450	10.8	6	
	0.78	2810	12.4	7	
	0.83	2990	13.2		4
	0.84	3020	13.3	8	
	0.90	3240	14.3		5
	1.07	3850	17.0		6
	1.17	4210	18.5		7
	1.21	4360	19.2		8

Accuracy: Greatest of either ±10% of controlled flow rate or 20 l/hr (0.0056 l/sec or 0.088 GPM).

40mm · 1 1/2” · Composite insert · **D-type**					
Pressure range. ΔP: 30-410 kPaD · 4.4-59.5 psid					
			Model no.	ABV2.D.W	ABV2.D.R
	l/sec	l/hr	GPM	White	Red
Nominal flow rate	0.27	972	4.28	1	
	0.36	1300	5.71	2	
	0.44	1580	6.97		1
	0.52	1870	8.24	3	
	0.58	2090	9.19	4	
	0.60	2160	9.51		2
	0.74	2660	11.7	5	
	0.76	2740	12.0		3
	0.83	2990	13.2	6	
	0.93	3350	14.7	7	
	0.99	3560	15.7	8	4
	1.07	3850	17.0		5
	1.28	4610	20.3		6
	1.39	5000	22.0		7
	1.43	5150	22.7		8

Accuracy: Greatest of either ±10% of controlled flow rate or 20 l/hr (0.0056 l/sec or 0.088 GPM).

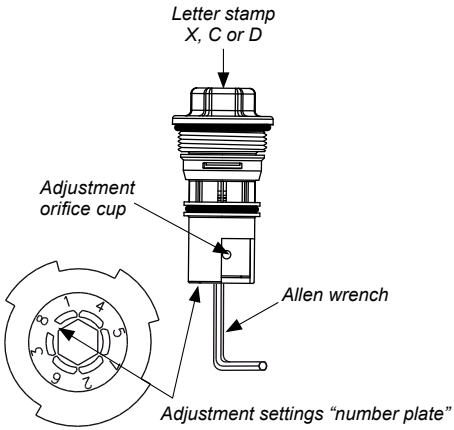

Figure 5

FlowCon International assumes no responsibility for mistakes, if any, in any printed material.