FlowCon Partner Globe

Manual Flow Control
65-300 mm / 2 1/2”-12”

SPECIFICATIONS

Static pressure:	1600 kPa / 230 psi
Media temperature:	-10°C to +120°C / +14°F to +248°F
Material:	
- Housing and cover:	Cast iron EN-GJL-250 5.1301
- Metal components (internal):	DZR brass CuZn36Pb2As
- Disc:	Composite
- Gasket and O-rings:	EPDM
- Hand wheel:	Polyamide PA6.6
Shut-off leakage:	EN12266-1
Flow rate range:	4.5-1500 m^3/hr / 19.8-6600 GPM
End connections:	Double flange connections according to EN1092-2, PN16. Flanges and mounting kits are not supplied by FlowCon
Body taps:	1/4” ISO

DIMENSIONS AND WEIGHT (nominal)

Model no.	Valve size mm (in)	L mm (in)	H mm (in)	D1 mm (in)	D2 mm (in)	Weight[1] kg (lb)	Kv/Cv m^3/hr (GPM)
PG.02.B	65 (2 1/2)	290 (11.4)	220 (8.66)	118 (4.65)	185 (7.28)	13.5 (29.8)	88.8 (103)
PG.03.B	80 (3)	310 (12.2)	220 (8.66)	132 (5.20)	200 (7.87)	17.8 (39.2)	113 (131)
PG.04.B	100 (4)	350 (13.8)	240 (9.45)	156 (6.14)	220 (8.66)	22.7 (50.0)	185 (215)
PG.05.B	125 (5)	400 (15.7)	260 (10.2)	184 (7.24)	250 (9.84)	34.0 (75.0)	285 (331)
PG.06.B	150 (6)	480 (18.9)	285 (11.2)	211 (8.31)	285 (11.2)	48.5 (107)	390 (452)
PG.08.B	200 (8)	600 (23.6)	480 (18.9)	266 (10.5)	340 (13.4)	115 (254)	710 (824)
PG.10.B	250 (10)	730 (28.7)	525 (20.7)	319 (12.6)	405 (15.9)	159 (351)	1190 (1380)
PG.12.B	300 (12)	850 (33.5)	525 (20.7)	370 (14.6)	460 (18.1)	211 (465)	1500 (1740)

Note 1: Weight includes two p/t plugs.

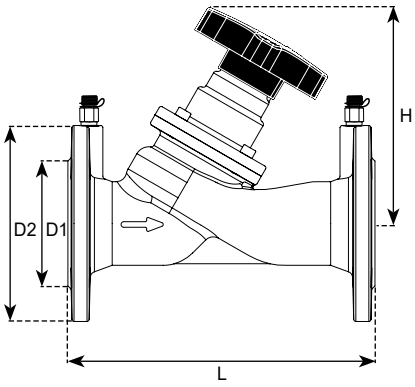

MODEL NUMBER SELECTION

PG . _____ . **B**

Insert size of valve:
02=DN65 / 2 1/2" **03**=DN80 / 3" **04**=DN100 / 4" **05**=DN125 / 5"
06=DN150 / 6" **08**=DN200 / 8" **10**=DN250 / 10" **12**=DN300 / 12"

Insert plug requirement:
B=pressure/temperature plugs (2 pcs) - standard

Example: PG.03.B=FlowCon Partner Globe 80 mm (3") with 2 pressure/temperature plugs.

FLANGE MATCH

Model no.	Flange size (inch)	ASME B16.5 weld neck flanges		Flange size (mm)	EN1092-2 weld neck flanges
		Class 125	Class 150		PN16
PG.02.B	2 1/2	✓	✓	65	✓
PG.03.B	3	✓	✓	80	✓
PG.04.B	4	✓	✓	100	✓
PG.05.B	5	✓	✓	125	✓
PG.06.B	6	✓	✓	150	✓
PG.08.B	8	✓	✓	200	✓
PG.10.B	10	✓	✓	250	✓
PG.12.B	12	✓		300	✓

HOW TO SELECT

The FlowCon Partner Globe is to be selected based on the required design flow and pipe size.
The FlowCon Partner Globe's pressure loss ΔpBV is found in the flow/pressure/setting diagrams. Each size has its own associated valve diagram. After correct setting, the FlowCon Partner Globe will ensure flow never to exceed design flow + tolerances even at partial load conditions.

EXAMPLE:
Design flow = 50000 l/hr = 50 m^3/hr (220 GPM)
Pipe size = DN100 (4")

❶ **Select valve** based on line size and system requirements to eliminate pipe modifications. In this example FlowCon Partner Globe DN100 (4") is selected. With its maximum flow of 180 m^3/hr (792 GPM) this valve size matches both size and flow requirements.

❷ **Set valve** to required design flow by checking specific size's valve diagram. Find flow in the left column and follow a horizontal line to the fist reached pre-setting graph. In this example proper setting will be 6.

❸ **Determine ΔpBV** following a vertical line down from the inter-section between design flow and setting. From the specific valve diagram, ΔpBV is at a flow rate of 50 m^3/hr (220 GPM) in setting 6 read to be 14 kPaD (2.03 psid).

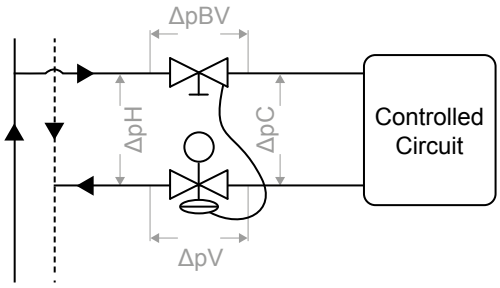

ΔpC = Controlled Δp Circuit
ΔpV = Δp across FlowCon PIM™-DP
ΔpBV = Δp across Partner Valve
ΔpH = Δp Pump Head

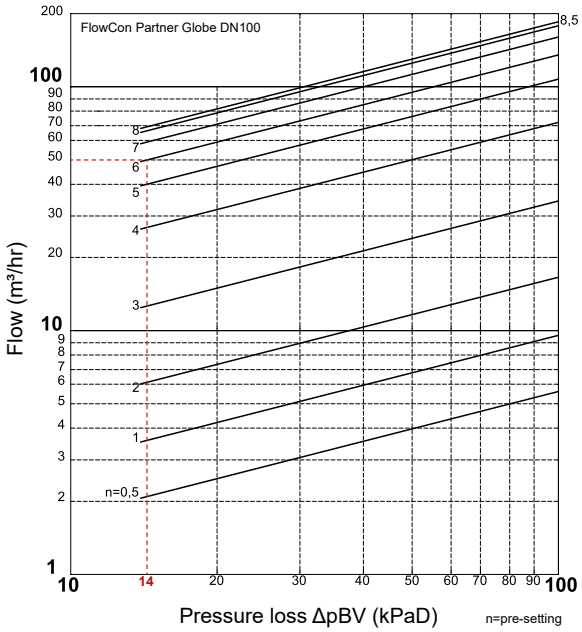

DESCRIPTION

FlowCon Partner Globe is a variable orifice double regulating valve. The valve is used for medium flow control.

Static balancing valves are designed to control hydraulic flow in HVAC systems. The valves can be installed in either supply and return pipelines when used as partner valve to a DPCV, the partner valve is installed in the supply and the DPCV in the return pipeline.

FLOW CURVES AND SETTINGS

FlowCon Partner Globe DN65

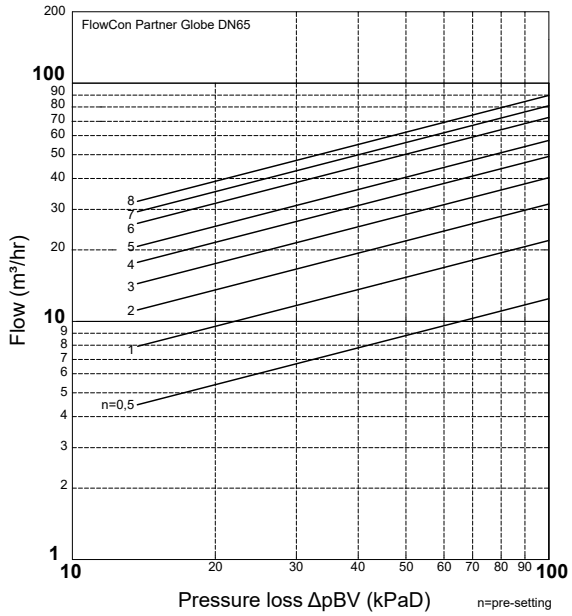

FlowCon Partner Globe DN80

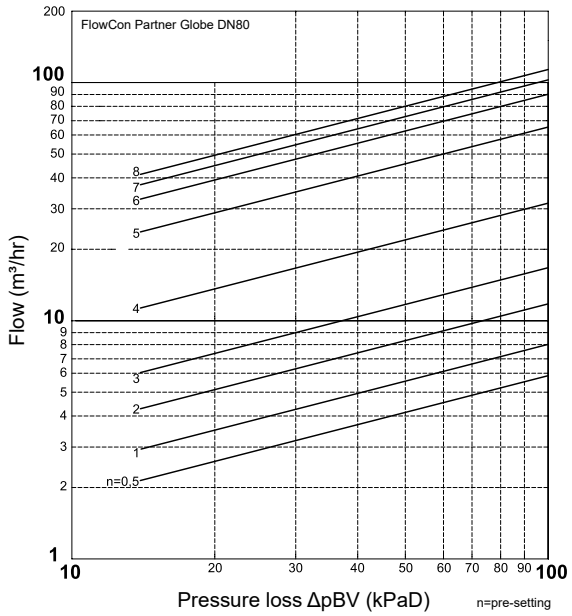

FlowCon Partner Globe DN65					
Turn	**Kv** (m^3/hr)	**Turn**	**Kv** (m^3/hr)	**Turn**	**Kv** (m^3/hr)
0.5	12.5	3.3	42.6	5.7	67.6
1.0	21.9	3.4	43.5	5.8	69.1
1.1	22.9	3.5	44.4	5.9	70.5
1.2	23.9	3.6	45.4	6.0	71.8
1.3	24.7	3.7	46.4	6.1	72.9
1.4	25.6	3.8	47.4	6.2	73.9
1.5	26.4	3.9	48.4	6.3	74.9
1.6	27.3	4.0	49.3	6.4	75.8
1.7	28.3	4.1	50.1	6.5	76.6
1.8	29.2	4.2	50.9	6.6	77.4
1.9	30.1	4.3	51.7	6.7	78.2
2.0	31.1	4.4	52.5	6.8	78.9
2.1	32.0	4.5	53.2	6.9	79.6
2.2	33.0	4.6	54.0	7.0	80.4
2.3	33.9	4.7	54.8	7.1	81.1
2.4	34.8	4.8	55.6	7.2	81.8
2.5	35.7	4.9	56.5	7.3	82.6
2.6	36.6	5.0	57.5	7.4	83.3
2.7	37.5	5.1	58.6	7.5	84.1
2.8	38.4	5.2	59.9	7.6	84.9
2.9	39.3	5.3	61.3	7.7	85.8
3.0	40.1	5.4	62.8	7.8	86.7
3.1	41.0	5.5	64.4	7.9	87.7
3.2	41.8	5.6	66.0	8.0	88.8

FlowCon Partner Globe DN80					
Turn	**Kv** (m^3/hr)	**Turn**	**Kv** (m^3/hr)	**Turn**	**Kv** (m^3/hr)
0.5	5.9	3.3	19.4	5.7	83.8
1.0	7.9	3.4	20.6	5.8	85.8
1.1	8.4	3.5	21.9	5.9	87.6
1.2	8.7	3.6	23.4	6.0	89.3
1.3	9.1	3.7	25.0	6.1	90.9
1.4	9.5	3.8	26.9	6.2	92.5
1.5	9.9	3.9	28.9	6.3	93.9
1.6	10.3	4.0	31.2	6.4	95.3
1.7	10.7	4.1	33.6	6.5	96.6
1.8	11.0	4.2	36.3	6.6	97.9
1.9	11.4	4.3	39.2	6.7	99.1
2.0	11.8	4.4	42.4	6.8	100.4
2.1	12.2	4.5	45.9	6.9	101.5
2.2	12.6	4.6	49.7	7.0	102.7
2.3	13.0	4.7	53.6	7.1	103.8
2.4	13.4	4.8	57.5	7.2	104.9
2.5	13.8	4.9	61.4	7.3	106.0
2.6	14.3	5.0	65.0	7.4	107.1
2.7	14.8	5.1	68.4	7.5	108.2
2.8	15.4	5.2	71.5	7.6	109.2
2.9	16.0	5.3	74.4	7.7	110.3
3.0	16.7	5.4	77.0	7.8	111.3
3.1	17.5	5.5	79.5	7.9	112.4
3.2	18.4	5.6	81.7	8.0	113.4

FLOW CURVES AND SETTINGS (...continued)

FlowCon Partner Globe DN100

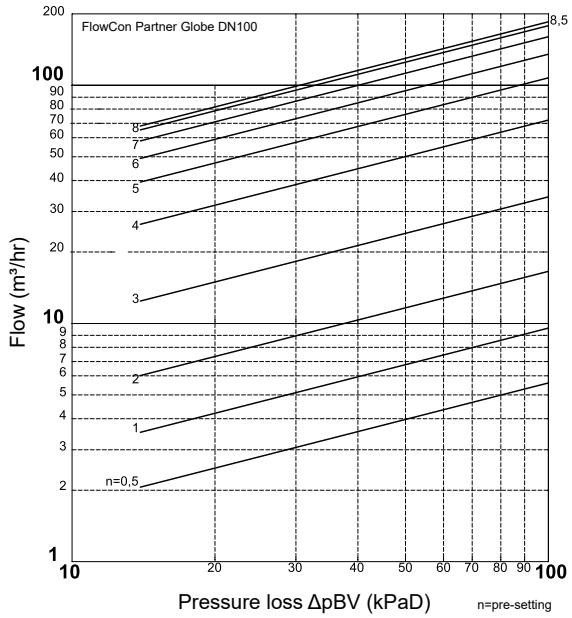

FlowCon Partner Globe DN125

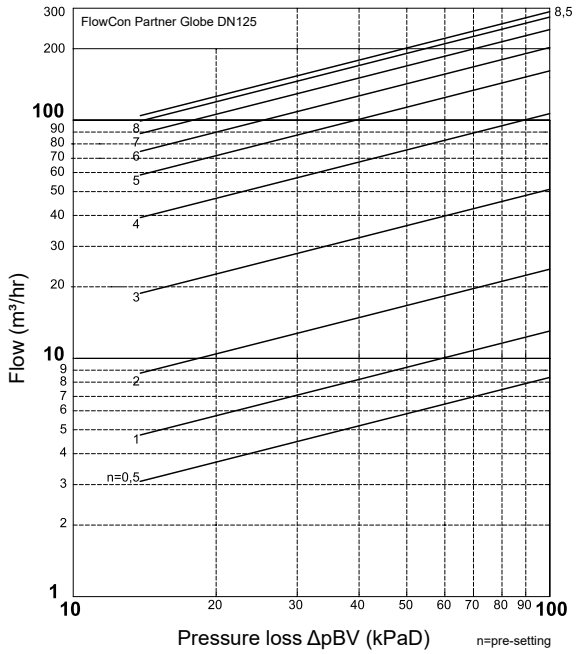

FlowCon Partner Globe DN100					
Turn	**Kv** (m^3/hr)	**Turn**	**Kv** (m^3/hr)	**Turn**	**Kv** (m^3/hr)
0.5	5.6	3.5	50.5	6.1	137.6
1.0	9.6	3.6	54.4	6.2	140.3
1.1	10.2	3.7	58.6	6.3	142.9
1.2	10.9	3.8	62.8	6.4	145.5
1.3	11.5	3.9	67.1	6.5	148.1
1.4	12.1	4.0	71.4	6.6	150.6
1.5	12.8	4.1	75.5	6.7	153.0
1.6	13.4	4.2	79.6	6.8	155.4
1.7	14.1	4.3	83.5	6.9	157.7
1.8	14.9	4.4	87.3	7.0	159.9
1.9	15.7	4.5	90.9	7.1	162.0
2.0	16.6	4.6	94.5	7.2	164.1
2.1	17.5	4.7	97.9	7.3	166.0
2.2	18.7	4.8	101.2	7.4	167.9
2.3	19.9	4.9	104.4	7.5	169.8
2.4	21.3	5.0	107.4	7.6	171.5
2.5	22.9	5.1	110.4	7.7	173.2
2.6	24.7	5.2	113.3	7.8	174.8
2.7	26.7	5.3	116.1	7.9	176.4
2.8	28.9	5.4	118.9	8.0	177.9
2.9	31.3	5.5	121.6	8.1	179.4
3.0	34.0	5.6	124.3	8.2	180.8
3.1	36.9	5.7	127.0	8.3	182.1
3.2	40.0	5.8	129.6	8.4	183.4
3.3	43.3	5.9	132.3	8.5	184.7
3.4	46.8	6.0	135.0		

FlowCon Partner Globe DN125					
Turn	**Kv** (m^3/hr)	**Turn**	**Kv** (m^3/hr)	**Turn**	**Kv** (m^3/hr)
0.5	8.3	3.5	77.0	6.1	205.8
1.0	13.0	3.6	82.7	6.2	209.8
1.1	13.9	3.7	88.5	6.3	213.8
1.2	14.9	3.8	94.5	6.4	217.7
1.3	15.8	3.9	100.4	6.5	221.6
1.4	16.8	4.0	106.5	6.6	225.4
1.5	17.8	4.1	112.5	6.7	229.1
1.6	18.9	4.2	118.5	6.8	232.8
1.7	19.9	4.3	124.3	6.9	236.3
1.8	21.1	4.4	130.1	7.0	239.8
1.9	22.3	4.5	135.7	7.1	243.2
2.0	23.7	4.6	141.1	7.2	246.5
2.1	25.2	4.7	146.3	7.3	249.7
2.2	26.8	4.8	151.4	7.4	252.8
2.3	28.6	4.9	156.2	7.5	255.9
2.4	30.7	5.0	160.9	7.6	259.0
2.5	33.1	5.1	165.4	7.7	262.0
2.6	35.8	5.2	169.7	7.8	264.9
2.7	38.9	5.3	173.9	7.9	267.9
2.8	42.5	5.4	178.0	8.0	270.8
2.9	46.6	5.5	182.1	8.1	273.7
3.0	51.2	5.6	186.1	8.2	276.6
3.1	56.0	5.7	190.0	8.3	279.4
3.2	61.0	5.8	194.0	8.4	282.3
3.3	66.2	5.9	197.9	8.5	285.1
3.4	71.5	6.0	201.9		

FLOW CURVES AND SETTINGS (...continued)

FlowCon Partner Globe DN150

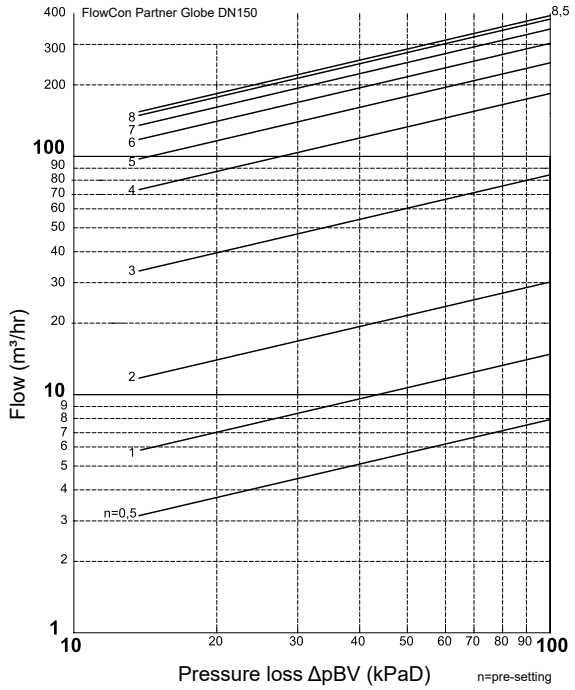

FlowCon Partner Globe DN200

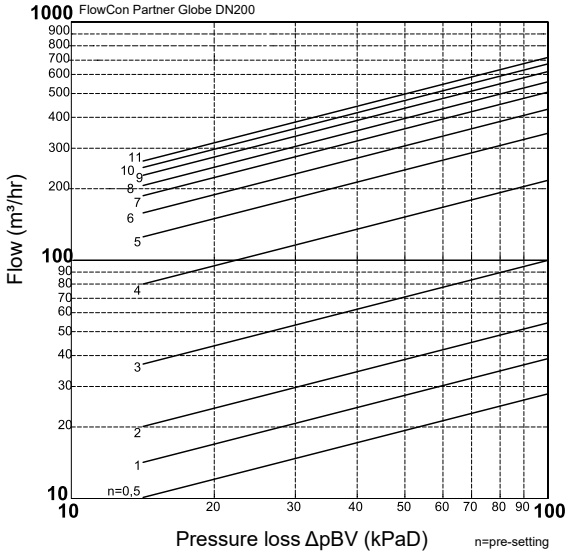

FlowCon Partner Globe DN150					
Turn	Kv (m³/hr)	Turn	Kv (m³/hr)	Turn	Kv (m³/hr)
0.5	7.9	3.5	132.0	6.1	303.0
1.0	14.8	3.6	143.1	6.2	307.7
1.1	15.6	3.7	154.0	6.3	312.3
1.2	16.3	3.8	164.6	6.4	316.9
1.3	17.1	3.9	174.5	6.5	321.3
1.4	18.0	4.0	183.7	6.6	325.7
1.5	19.1	4.1	192.0	6.7	329.9
1.6	20.5	4.2	199.6	6.8	334.1
1.7	22.1	4.3	206.7	6.9	338.2
1.8	24.2	4.4	213.3	7.0	342.2
1.9	26.7	4.5	219.5	7.1	346.1
2.0	29.7	4.6	225.3	7.2	349.9
2.1	33.2	4.7	231.0	7.3	353.6
2.2	37.2	4.8	236.5	7.4	357.2
2.3	41.7	4.9	241.8	7.5	360.7
2.4	46.5	5.0	247.1	7.6	364.2
2.5	51.8	5.1	252.4	7.7	367.5
2.6	57.4	5.2	257.7	7.8	370.7
2.7	63.4	5.3	262.9	7.9	373.8
2.8	69.7	5.4	268.1	8.0	376.8
2.9	76.4	5.5	273.3	8.1	379.7
3.0	83.7	5.6	278.4	8.2	382.5
3.1	91.7	5.7	283.5	8.3	385.2
3.2	100.7	5.8	288.4	8.4	387.7
3.3	110.5	5.9	293.4	8.5	390.2
3.4	121.1	6.0	298.2		

FlowCon Partner Globe DN200							
Turn	Kv (m³/hr)	Turn	Kv (m³/hr)	Turn	Kv (m³/hr)	Turn	Kv (m³/hr)
0.5	27.5	3.5	148.6	6.1	438.5	8.7	602.0
1.0	38.6	3.6	161.0	6.2	447.0	8.8	607.9
1.1	40.1	3.7	174.2	6.3	455.4	8.9	613.7
1.2	41.5	3.8	187.9	6.4	463.7	9.0	619.3
1.3	42.9	3.9	202.0	6.5	471.7	9.1	624.7
1.4	44.2	4.0	216.2	6.6	479.6	9.2	630.0
1.5	45.6	4.1	230.3	6.7	487.1	9.3	635.0
1.6	47.0	4.2	244.2	6.8	494.3	9.4	640.0
1.7	48.6	4.3	257.8	6.9	501.1	9.5	644.8
1.8	50.3	4.4	271.0	7.0	507.6	9.6	649.4
1.9	52.3	4.5	283.9	7.1	513.6	9.7	654.0
2.0	54.6	4.6	296.3	7.2	519.3	9.8	658.5
2.1	57.2	4.7	308.3	7.3	524.8	9.9	662.9
2.2	60.1	4.8	319.7	7.4	530.0	10.0	667.2
2.3	63.4	4.9	330.7	7.5	535.2	10.1	671.5
2.4	67.1	5.0	341.2	7.6	540.2	10.2	675.8
2.5	71.2	5.1	351.2	7.7	545.2	10.3	680.0
2.6	75.8	5.2	360.8	7.8	550.3	10.4	684.2
2.7	80.9	5.3	370.0	7.9	555.5	10.5	688.4
2.8	86.6	5.4	379.0	8.0	560.8	10.6	692.7
2.9	92.9	5.5	387.7	8.1	566.4	10.7	696.9
3.0	99.9	5.6	396.3	8.2	572.1	10.8	701.2
3.1	107.8	5.7	404.8	8.3	578.0	10.9	705.6
3.2	116.6	5.8	413.3	8.4	583.9	11.0	710.0
3.3	126.3	5.9	421.7	8.5	590.0		
3.4	137.0	6.0	430.1	8.6	596.0		

FLOW CURVES AND SETTINGS (...continued)

FlowCon Partner Globe DN250

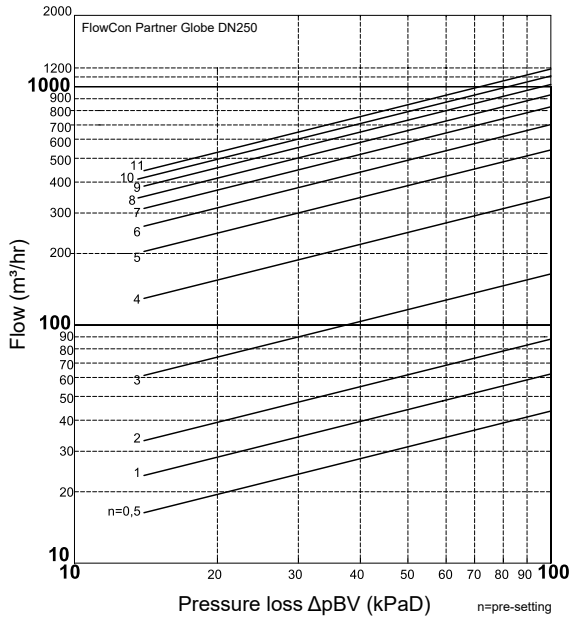

FlowCon Partner Globe DN300

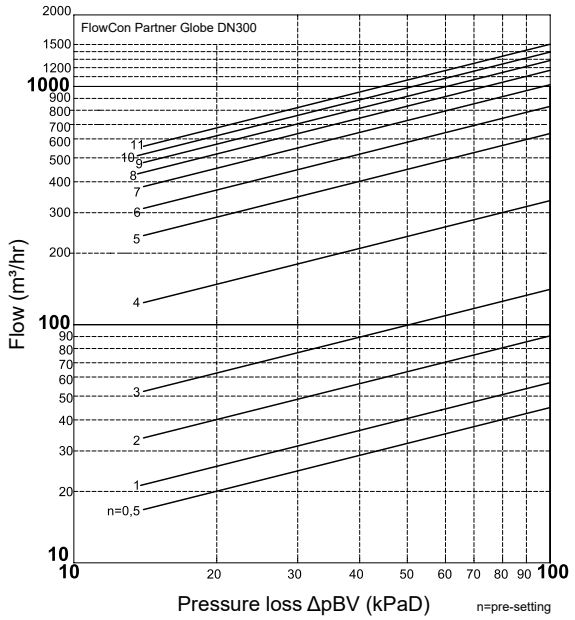

FlowCon Partner Globe DN250							
Turn	Kv (m^3/hr)	Turn	Kv (m^3/hr)	Turn	Kv (m^3/hr)	Turn	Kv (m^3/hr)
0.5	43.5	3.5	239.2	6.1	708.1	8.7	993.9
1.0	62.3	3.6	258.4	6.2	722.0	8.8	1003.5
1.1	64.7	3.7	278.9	6.3	735.7	8.9	1013.0
1.2	66.9	3.8	300.5	6.4	749.2	9.0	1022.4
1.3	69.0	3.9	322.8	6.5	762.5	9.1	1031.7
1.4	71.0	4.0	345.3	6.6	775.4	9.2	1040.9
1.5	73.1	4.1	367.4	6.7	788.1	9.3	1050.0
1.6	75.3	4.2	389.2	6.8	800.3	9.4	1058.9
1.7	77.7	4.3	410.5	6.9	812.2	9.5	1067.8
1.8	80.4	4.4	431.2	7.0	823.7	9.6	1076.5
1.9	83.6	4.5	451.4	7.1	834.8	9.7	1085.1
2.0	87.3	4.6	471.0	7.2	845.5	9.8	1093.6
2.1	91.6	4.7	489.9	7.3	856.0	9.9	1101.9
2.2	96.6	4.8	508.3	7.4	866.2	10.0	1110.2
2.3	102.3	4.9	526.1	7.5	876.3	10.1	1118.4
2.4	108.7	5.0	543.3	7.6	886.2	10.2	1126.5
2.5	115.8	5.1	559.9	7.7	896.1	10.3	1134.4
2.6	123.8	5.2	576.0	7.8	905.8	10.4	1142.3
2.7	132.5	5.3	591.7	7.9	915.6	10.5	1150.1
2.8	142.0	5.4	607.0	8.0	925.3	10.6	1157.7
2.9	152.5	5.5	622.0	8.1	935.1	10.7	1165.3
3.0	163.9	5.6	636.8	8.2	944.9	10.8	1172.8
3.1	176.4	5.7	651.3	8.3	954.8	10.9	1180.2
3.2	190.1	5.8	665.7	8.4	964.6	11.0	1187.5
3.3	205.1	5.9	679.9	8.5	974.4		
3.4	221.4	6.0	694.0	8.6	984.2		

FlowCon Partner Globe DN300							
Turn	Kv (m^3/hr)	Turn	Kv (m^3/hr)	Turn	Kv (m^3/hr)	Turn	Kv (m^3/hr)
0.5	44.9	3.5	202.0	6.1	844.2	8.7	1252.1
1.0	57.1	3.6	221.1	6.2	863.6	8.8	1263.2
1.1	59.9	3.7	243.4	6.3	883.3	8.9	1274.2
1.2	62.8	3.8	269.4	6.4	903.1	9.0	1285.1
1.3	65.9	3.9	299.1	6.5	922.9	9.1	1296.0
1.4	69.0	4.0	331.7	6.6	942.5	9.2	1306.9
1.5	72.2	4.1	365.6	6.7	962.0	9.3	1317.8
1.6	75.6	4.2	400.1	6.8	981.0	9.4	1328.7
1.7	79.0	4.3	434.4	6.9	999.7	9.5	1339.6
1.8	82.5	4.4	468.0	7.0	1017.8	9.6	1350.5
1.9	86.1	4.5	500.2	7.1	1035.3	9.7	1361.4
2.0	89.8	4.6	530.8	7.2	1052.3	9.8	1372.3
2.1	93.5	4.7	559.4	7.3	1068.7	9.9	1383.2
2.2	97.4	4.8	586.1	7.4	1084.6	10.0	1394.1
2.3	101.4	4.9	611.0	7.5	1100.0	10.1	1405.1
2.4	105.7	5.0	634.1	7.6	1114.9	10.2	1416.0
2.5	110.2	5.1	655.6	7.7	1129.3	10.3	1427.0
2.6	115.1	5.2	676.0	7.8	1143.2	10.4	1437.9
2.7	120.5	5.3	695.6	7.9	1156.7	10.5	1448.9
2.8	126.4	5.4	714.6	8.0	1169.7	10.6	1459.9
2.9	133.1	5.5	733.2	8.1	1182.3	10.7	1470.9
3.0	140.7	5.6	751.6	8.2	1194.6	10.8	1481.9
3.1	149.5	5.7	769.8	8.3	1206.5	10.9	1493.0
3.2	159.8	5.8	788.1	8.4	1218.2	11.0	1504.1
3.3	171.8	5.9	806.5	8.5	1229.7		
3.4	185.7	6.0	825.1	8.6	1241.0		

GENERAL SPECIFICATIONS

1. MANUAL FLOW CONTROL VALVES - FLOWCON PARTNER GLOBE

1.1. Contractor shall install the static balancing valves where indicated in drawings.
1.2. Valve shall be a complete unit, mechanically operated, static balancing device, which shall be able to accurately verify the system flow.
1.3. Valve shall be variable orifice type with precise flow regulation according to system pressure.
1.4. Valve shall be externally adjustable with the valve in-line and the system in operation.
1.5. Valve shall be able to function as a shut off valve (tightness according to EN 12266-1).
1.6. Valve shall be lockable and in locked position be tamper proof.

2. VALVE HOUSING

2.1. Housing shall consist of cast iron EN-GJL-250 5.1301, rated at no less than 1600 kPa (230 psi) static pressure and +120°C (+248°F).
2.2. Housing shall be permanently marked to show direction of flow.
2.3. Housing shall be for installation between flanges.
2.4. Dual pressure/temperature test plugs for verifying performance shall be standard on all valve sizes.

ACCESSORIES

- ACC00101: Pressure/temperature plug.
- F212: Capillary tube with fitting and adaptor for connection to FlowCon PIM-DP.

APPLICATION EXAMPLES

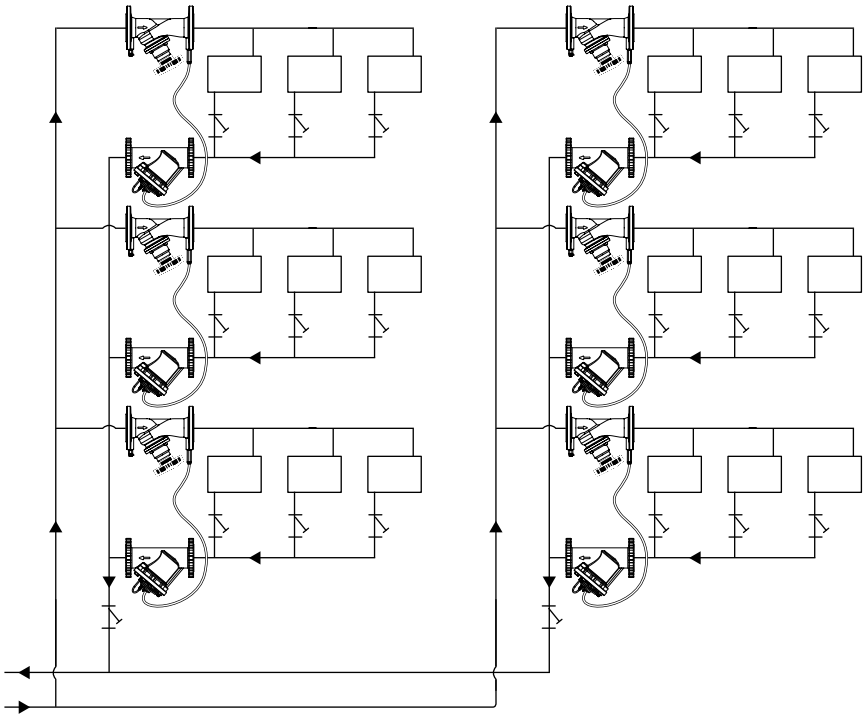

FlowCon PIM-DP mounted with FlowCon Partner Globe on the branch in a 2-pipe heating system.

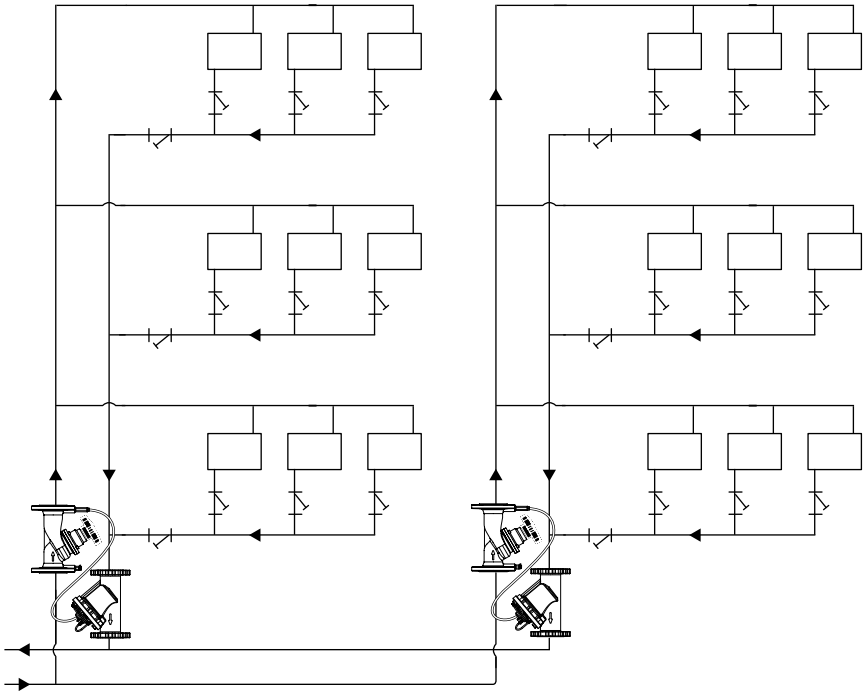

FlowCon PIM-DP mounted with FlowCon Partner Globe on the riser in a 2-pipe heating system.

UPDATES

For latest updates please see www.flowcon.com

FlowCon International can accept no responsibility for possible errors in any printed material.
All rights reserved.