Installation and Operation Instruction

The **FlowCon GreEQ - equal percentage -** inserts are for use with three different FlowCon valve housings, either:

① FlowCon A DN15-25 (1/2”-1”)
② FlowCon AB DN15-32 (1/2”-1 1/4”)
③ FlowCon ABV DN15-40 (1/2”-1 1/2”)

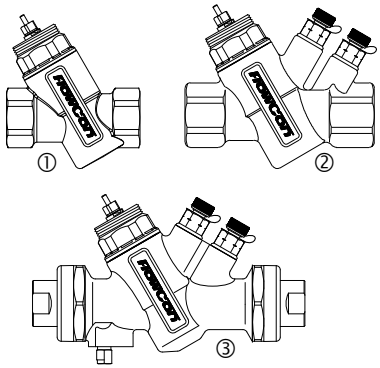

The desired flow rate is set by adjusting the insert (turn counter-clockwise to setting 1.0 and then clockwise up) with a special adjustment key. **Range is between 1.0 and 5.0 ⚠ Do not overturn.** Scale setting is located on top of the insert. The large white digits, numbered 1 to 5, indicate full turns and red digits, numbered 0 to 9, indicate 1/10 of full turn.

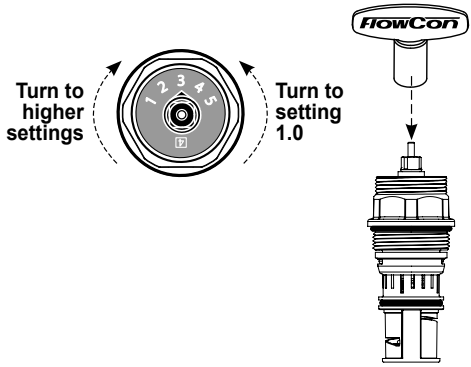

Insert Setting and Installation

Prior to installing the FlowCon GreEQ insert (supplied from factory in setting 5.0 due to calibration), the system should be properly flushed. Blank valve covers are available to be installed during flushing.

It is recommended to grease the O-rings located around the insert and headnut with silicone grease before installing the insert in the valve housing.

IMPORTANT NOTE for GreEQ.0: Operate the valve in setting 5.0 in correct flow direction for 30 seconds to release air and then adjust to final setting. If final setting is 3.0 or below, this is essential to avoid internal overpressure.

Once insert is fitted in the valve housing and flow is set, the required actuator may be applied.

Please see specific installation instruction for selected actuator.

FlowCon GreEQ										
	20 mm · 3/4”						40 mm · 1 1/2”			
	16-600 kPaD 2.3-87 psid[1]			30-800 kPaD 4.4-116 psid[1]			16-800 kPaD 2.3-116 psid[2]			Setting
	GreEQ.0 (grey O-ring)			**GreEQ.1** (black O-ring)			**GreEQ.2** (black O-ring)			
Nominal flow rate	l/sec	l/hr	GPM	l/sec	l/hr	GPM	l/sec	l/hr	GPM	
	0.00482	17.3	0.0763	0.00764	27.5	0.121	0.236	850	3.74	1.0
	0.00548	19.7	0.0868	0.00880	31.7	0.139	0.252	908	4.00	1.1
	0.00629	22.6	0.0995	0.0102	36.7	0.162	0.256	923	4.07	1.2
	0.00724	26.1	0.115	0.0119	42.8	0.188	0.264	950	4.19	1.3
	0.00836	30.1	0.132	0.0139	49.9	0.219	0.281	1010	4.45	1.4
	0.00965	34.7	0.153	0.0161	58.0	0.255	0.300	1080	4.76	1.5
	0.0111	40.0	0.176	0.0187	67.3	0.296	0.303	1090	4.80	1.6
	0.0128	45.9	0.202	0.0216	77.6	0.342	0.353	1270	5.59	1.7
	0.0146	52.5	0.231	0.0248	89.1	0.392	0.375	1350	5.95	1.8
	0.0166	59.7	0.263	0.0283	102	0.448	0.400	1440	6.34	1.9
	0.0188	67.7	0.298	0.0322	116	0.509	0.422	1520	6.70	2.0
	0.0212	76.3	0.336	0.0364	131	0.576	0.444	1600	7.05	2.1
	0.0238	85.6	0.377	0.0409	147	0.647	0.464	1670	7.36	2.2
	0.0266	95.6	0.421	0.0457	164	0.723	0.481	1730	7.62	2.3
	0.0295	106	0.467	0.0508	183	0.805	0.497	1790	7.89	2.4
	0.0327	118	0.517	0.0563	202	0.891	0.511	1840	8.11	2.5
	0.0360	129	0.569	0.0620	223	0.982	0.522	1880	8.28	2.6
	0.0394	142	0.624	0.0680	245	1.08	0.533	1920	8.46	2.7
	0.0431	155	0.681	0.0743	267	1.18	0.542	1950	8.59	2.8
	0.0468	168	0.741	0.0809	291	1.28	0.550	1980	8.72	2.9
	0.0507	182	0.803	0.0876	315	1.39	0.556	2000	8.81	3.0
	0.0547	197	0.866	0.0946	340	1.50	0.561	2020	8.90	3.1
	0.0588	212	0.931	0.102	366	1.61	0.567	2040	8.99	3.2
	0.0630	227	0.998	0.109	392	1.73	0.572	2060	9.07	3.3
	0.0673	242	1.07	0.117	419	1.84	0.575	2070	9.12	3.4
	0.0716	258	1.13	0.124	446	1.96	0.578	2080	9.16	3.5
	0.0760	273	1.20	0.132	474	2.08	0.581	2090	9.21	3.6
	0.0804	289	1.27	0.139	501	2.21	0.581	2090	9.21	3.7
	0.0847	305	1.34	0.147	529	2.33	0.582	2100	9.25	3.8
	0.0890	320	1.41	0.155	557	2.45	0.584	2100	9.25	3.9
	0.0933	336	1.48	0.162	584	2.57	0.585	2110	9.27	4.0
	0.0975	351	1.54	0.170	611	2.69	0.586	2110	9.29	4.1
	0.102	365	1.61	0.177	637	2.80	0.588	2120	9.34	4.2
	0.105	379	1.67	0.184	662	2.91	0.589	2120	9.34	4.3
	0.109	393	1.73	0.191	687	3.02	0.590	2120	9.34	4.4
	0.113	406	1.78	0.198	711	3.13	0.592	2130	9.38	4.5
	0.116	417	1.84	0.204	733	3.22	0.593	2140	9.43	4.6
	0.119	428	1.88	0.209	754	3.32	0.595	2140	9.43	4.7
	0.122	438	1.93	0.215	773	3.40	0.596	2150	9.47	4.8
	0.124	447	1.97	0.220	790	3.48	0.598	2150	9.47	4.9
	0.126	454	2.00	0.224	805	3.54	0.600	2160	9.52	5.0

Note 1: Accuracy is ±10% of controlled flow and for flows below 0.06 l/sec (0.95 GPM) the standard deviation is less than 0.003 l/sec (0.048 GPM).
Note 2: Accuracy is greatest of either ±10% of controlled flow or ±5% of maximum flow rate.

A micrometer **setting of 3.4** as illustrated above corresponds to a maximum flow rate of

GreEQ.0: 0.0673 l/sec (1.07 GPM)

GreEQ.1: 0.117 l/sec (1.84 GPM)

GreEQ.2: 0.575 l/sec (9.12 GPM)

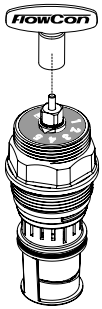

Use the special designed key (FlowCon part no. ACC0001) for micrometer setting.

General Assembly Drawing
FlowCon GreEQ

A: Valve housing
B: GreEQ insert
C: Adjustment keys
D1: P/t plug (2 pcs.)
D2: Plug (2 pcs.)
E: Union end connections
F: FlowCon actuator

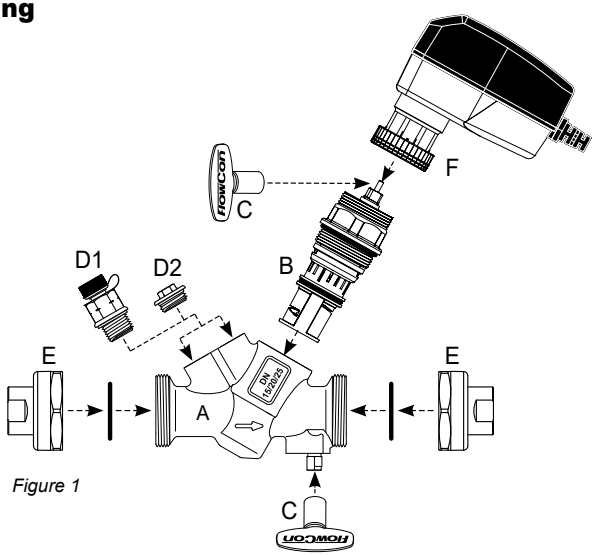

Figure 1