FIVC Swing Check Valve

Ductile Iron – PN 16 – Bolted Bonnet – EN 1092-2

FCH series

Technical data

Main features and materials

- Body: Ductile Iron
- Bonnet: Ductile Iron
- Disc: Ductile Iron
- Seat: Brass
- Coating: Epoxy *(200 um)*
- Dimensions: Face-to-Face acc. to DIN 3202-F6
- Drilling: Flanges acc. to DIN 2533/ EN 1092
- Design: DIN 3356
- Pressure test: ISO 5208
- USP: Low incidence of losses, system efficiency

Field of applications

- Temperature range: 0 to 90 °C
- Max. working pressure: 16 bar

- HVAC
- Industrial water
- Other various industries

Description

FIVC Swing Check Valve is designed as a single-direction device, which eliminates the return of pressurized fluid.
Benefits of using the check valves include the improved system efficiency and reduced costs.

This valve features a low incidence of losses of pressure due to the rounded shape of the valve body and the large passage section, which is obtained via the oscillation of the disc.
This valve is suitable for Water, Oil, and Gas.

Declaration

The product has been manufactured and tested in accordance with the European PED Directive Nº 2014/68/EU, dated 15/05/2014.

Dimensions

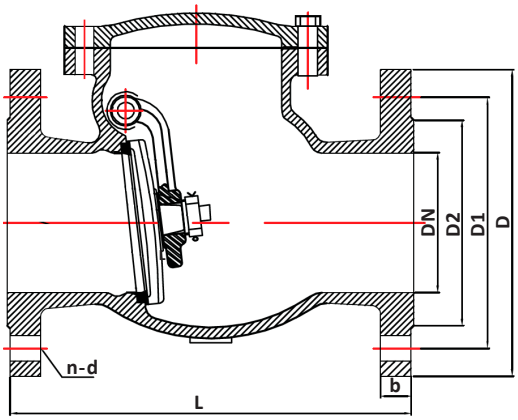

Product code	Size	L	D	D1	D2	b	n-d	H	Kg
FCH050C16CB217	50	200	165	125	102	20	4-19	137	11
FCH065C16CB217	65	240	185	145	122	20	4-19	147	14
FCH080C16CB217	80	260	200	160	138	22	8-19	159	18
FCH100C16CB217	100	300	220	180	158	24	8-19	180	24
FCH125C16CB217	125	350	250	210	188	26	8-19	203	35
FCH150C16CB217	150	400	285	240	212	26	8-23	223	45
FCH200N16CB217	200	500	340	295	268	30	12-23	258	82
FCH250N16CB217	250	600	405	355	320	32	12-26	290	100
FCH300N16CB217	300	700	460	410	378	32	12-26	325	165

Dimensions are in millimeters

FIVC Swing Check Valve

Ductile Iron – PN 16 – Bolted Bonnet – EN 1092-2

Product Specification

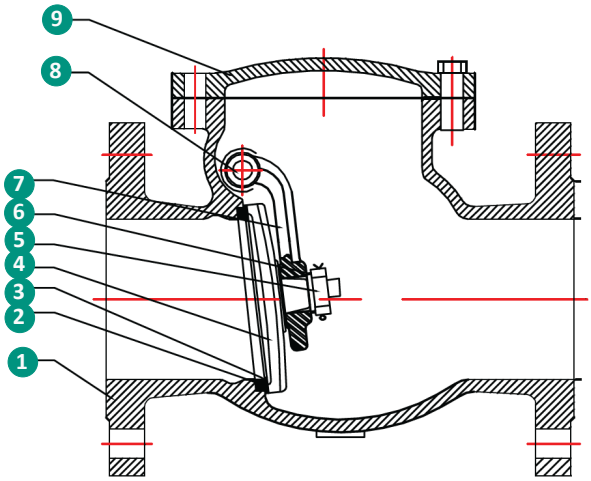
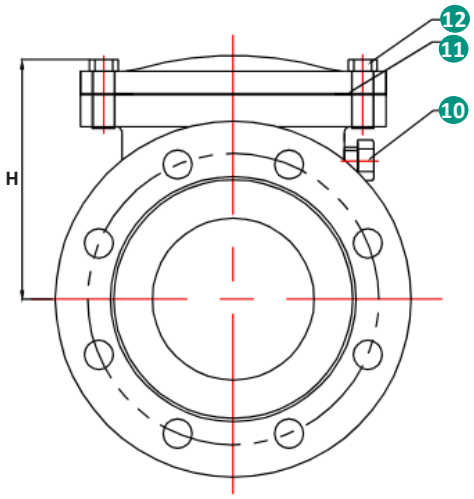
N°	Name	Material
1	Body	Ductile Iron GGG 50 DIN EN 1563
2	Body seat	Brass CuZn40 EN 12163
3	Disc seat	Brass CuZn40 EN 12163
4	Disc	Ductile Iron GGG 50 DIN 1563
5	Cap	Steel 40 Cr EN 10083-3 41Cr4
6	Washer	Steel 40 Cr EN 10083-3 41Cr4
7	Plug	Ductile Iron GGG 50 DIN EN 1563
8	Plug axel	Stainless Steel 2Cr13 DIN 17440 X20Cr13
9	Bonnet	Ductile Iron GGG 50 DIN EN 1563
10	Bolt	Steel 40 Cr EN 10083-3 41Cr4
11	Gasket	Graphite
12	Bolt	40 Cr EN 10083-3 41Cr4