FIVC Gate Valve

Ductile Iron – PN 16 – Non Rising Stem – WRAS – EN 1092-2

FGA series

Technical data

Main features and materials

- Body: Ductile Iron
- Bonnet: Ductile Iron
- Wedge: Ductile Iron+EPDM
- Stem: Stainless Steel
- Handwheel: Ductile Iron
- Coating: Epoxy powder *(thickness 0.2-0.3 mm)*
- USP: WRAS approval
- Standard: BS 5163
- Dimensions: EN 558-1-1995

Field of applications

- Temperature range: -10 to 85°C
- Max. working pressure: 16 bar

- Petrochemical industry
- Irrigation systems
- Mining and infrastructure industries
- Shipyard industry
- Compressed air
- Textile industry
- Mechanical industry
- Other various industries

Description

FIVC Gate Valve is designed to be installed in pipelines only for isolating purposes.
Benefits of using gate valves include the feature of good closing along with the minimum pressure loss. Furthermore, the functionality of the valve prevents the water hammer phenomenon and is used for all types of applications - suitable for both above ground and underground installation. The valve can be used for Water.

Declaration

The product has been inspected and tested in accordance with the European PED Directive Nº 2014/68/EU, Schedule 4, Module H, dated 15/05/2014 and is CE marked.

WRAS

Dimensions

DN 65-300

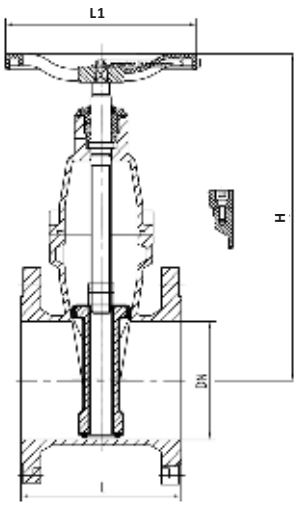

DN 350-600

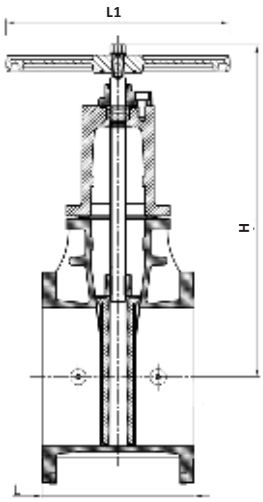

Product Information

Product code	Size (DN)	L*	L1*	H*	Kg
FGA065N16NB231	65	190	160	296	12.5
FGA080N16NB231	80	203	200	349	16.3
FGA100N16NB231	100	229	200	396	20.4
FGA125N16NB231	125	254	250	477	27.55
FGA150N16NB231	150	267	250	548	36.7
FGA200N16NB231	200	292	280	694	60.5
FGA250N16NB231	250	330	370	840	-
FGA300N16NB231	300	356	370	960	-
FGA350N16NB231	350	381	508	842	-
FGA400N16NB231	400	406	558	931	-
FGA450N16NB231	450	432	610	1058	-
FGA500N16NB231	500	457	610	1146	-
FGA600N16NB231	600	508	762	1298	-

**Dimensions are in millimeters*

FIVC Gate Valve

Ductile Iron – PN 16 – Non Rising Stem – WRAS – EN 1092-2

Product Specification

DN 65-300

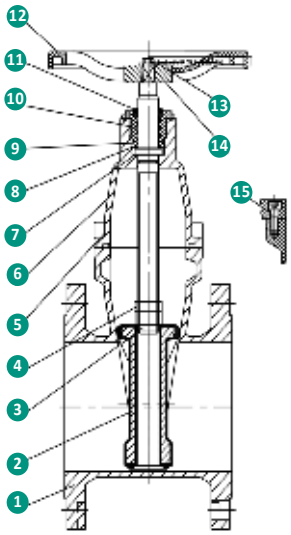

N°	Name	Material
1	Body	Ductile Iron GJS-450-10
2	Wedge	Ductile Iron GJS-450-10 + EPDM
3	Stem	Stainless Steel 2Cr13
4	Stem nut	Bronze C83600
5	Seal ring	EPDM
6	Bonnet	Ductile Iron GJS-450-10
7	Adjusted washer	Bronze C83600
8	Gland	Ductile Iron GJS-450-10
9	O-Ring	EPDM
10	O-Ring	EPDM
11	Dust cover	EPDM
12	Handwheel	Ductile Iron GJS-450-10
13	Bolt	Stainless Steel SS 304
14	Washer	Stainless Steel SS 304
15	Screw	Gr. 8.8

DN 350-600

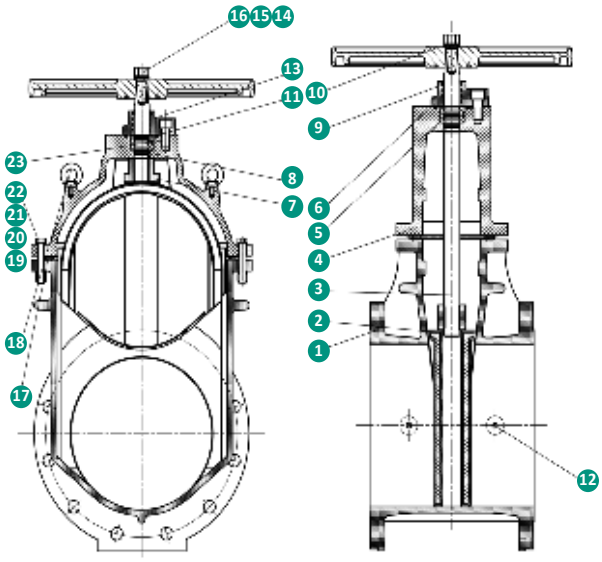

N°	Name	Material
1	Body	Ductile Iron GJS-500-7
2	Seat rubber coating	Ductile Iron GJS-500-7 + EPDM
3	Shaft	Stainless Steel BS 970 420S37
4	Cover	Ductile Iron GJS-500-7
5	Split ring	BS 1400 LG2
6	Seal seat	Stainless Steel BS 970 420S37
7	Plate nut	BS 1400 LG2
8	O-Ring	EPDM
9	Dust cover	EPDM
10	Handwheel	Ductile Iron GJS-500-7
11	O-Ring	EPDM
12	Square pipe plug	Stainless Steel BS 970 304S15
13	O-Ring	EPDM
14	Washer	Stainless Steel BS 970 304S15
15	Spring washer	Stainless Steel BS 970 304S15
16	C Hex cylinder head screw	Stainless Steel BS 970 304S15 Cr. 8.8
17	Mouth gasket	EPDM
18	Lifting bolt	Galvanized Steel BS 970 708M40
19	C Hex cylinder head screw	Stainless Steel BS 970 304S15 Cr. 8.8
20	Spring washer	Stainless Steel BS 970 304S15
21	Nut	Stainless Steel BS 970 304S15
22	Washer	Stainless Steel BS 970 304S15
23	Hex cylinder head screw	Stainless Steel BS 970 304S15 Cr. 8.8