FIVC Y-Strainer

Ductile Iron – Y-Strainer – PN 16 – WRAS – EN 1092-2

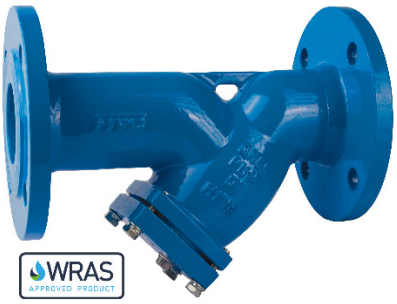

FYS series

Technical data

Main features and materials

- Body: Ductile Iron
- Cover: Ductile Iron
- Screen: Stainless Steel
- Sealing ring: WRAS EPDM
- Coating: Epoxy RAL 5015 *(250 µm)*
- Dimensions: Face-to-Face acc. to EN 558 *(series 1)*
  ISO 5752 DIN 3202 F1
- Closing tightness: BS EN 12266-1
- USP: WRAS approved
  Compact settlement
  Environment-friendly
  Cleaning without disassembling

Field of applications

- Temperature range: -10 to 85 °C
- Max. working pressure: 16 bar
- Drinking water
- Filtration system

Description

FIVC Y-Strainer is designed to collect and prevent solid impurities from entering the pipeline that can cause malfunction and damage to the most sensitive plant components such as pumps, control valves, flow, and heat meters. The strainer holds solid particles, debris, which dimensions exceed screen mesh.

The collected debris can thereby be disposed and the filter can be cleaned without removing the strainer from the line.

This strainer can be delivered with a test point plug by request, but as standard, the strainer is delivered without this device.

The valve is suitable for drinking water.

Declaration

The product has been inspected and tested per the European PED Directive N° 2014/68/EU, dated 15/05/2014.

The valve is WRAS approved.

Dimensions

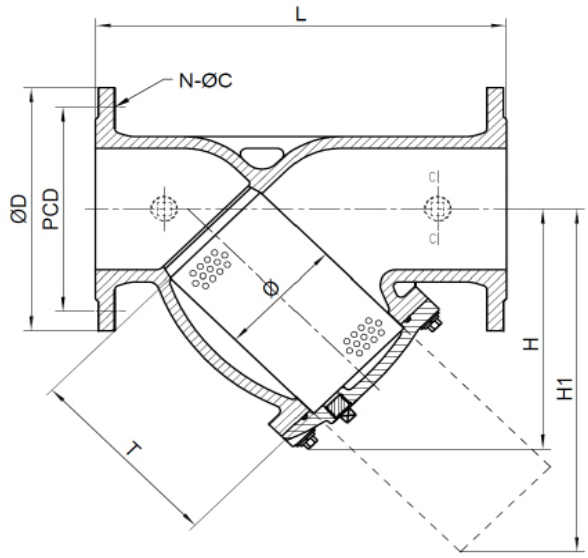

Product code	Size	L	ØD	PCD	N-ØC	H	H1	Ø	T	Ød	L1	Kg
FYS050N16231	50	230	165	125	4-19	124	183	49	112	25.4	8	8.7
FYS065N16231	65	290	185	145	4-19	137	205	64	122	25.4	8	10.6
FYS080N16231	80	310	200	160	8-19	152	238	79	135.5	25.4	9	12.7
FYS100N16231	100	350	220	180	8-19	205	318	99	187	25.4	9	16.8
FYS125N16231	125	400	250	210	8-19	244	358	124	208	25.4	9.5	24.1
FYS150N16231	150	480	285	240	8-23	269	380	149	207	25.4	11	33.3
FYS200N16231	200	600	340	295	12-23	341	508	199	284	25.4	12	54.9
FYS250N16231	250	730	405	355	12-28	455	700	249	405	25.4	14	90
FYS300N16231	300	850	460	410	12-28	476	730	299	416	25.4	14.6	113
FYS350N16231	350	980	520	470	16-28	625	940	367	520	25.4	15	234
FYS400N16231	400	1100	580	525	16-31	685	1050	412	580	25.4	16	306
FYS450N16231	450	1200	640	585	20-31	746	1110	460	597	25.4	18	352
FYS500N16231	500	1250	715	650	20-34	845	1550	510	696	25.4	18	434
FYS600N16231	600	1450	840	770	20-37	984	1560	610	822	25.4	18	650

Dimensions are in millimeters

C-C

Test point plug platform

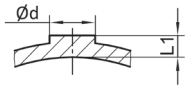

FIVC Y-Strainer

Ductile Iron – Y-Strainer – PN 16 – WRAS – EN 1092-2

Screen Information

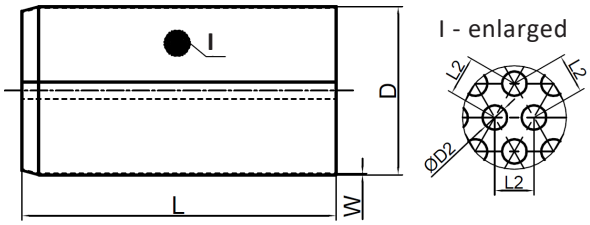

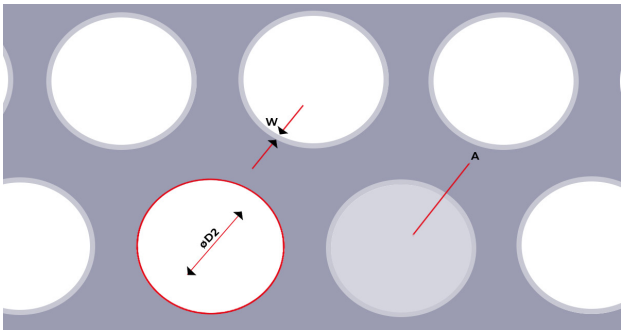

ST	Valve size	Mesh	ØD2	D	L	Drain	L2	W	A
		per inch²	*mm*	*mm*	*mm*	*Inch*	*mm*	*mm*	*%*
Perforated	50	104	1.5	49	112	Rp 3/8”	2.5	0.8	28
	65			64	122	Rp 3/8”			
	80			79	135.5	Rp 3/8”			
	100			99	187	Rp 3/8”			
	125			124	208	Rp 3/8”			
	150			149	207	Rp 3/8”			
	200	26	2.5	199	284	Rp 1/2”	5	1.2	20
	250			249	405	Rp 1/2”			
	300			299	416	Rp 1/2”			
	350			367	521	Rp 3/4”		1.4	
	400	22	3.5	412	580	Rp 3/4”	5.5	1.8	33
	450			460	597	G 1”			
	500			510	696	G 1”			
	600			610	822	G 1”			

ST: Screen type • Mesh: number of holes • ØD2: Aperture/inscribed hole diameter • D: Mesh diameter • L: Mesh length • L2: Hole spacing • W: Thickness of sheet • A: Opening area, where % is the flow area ratio in %

Product Specification

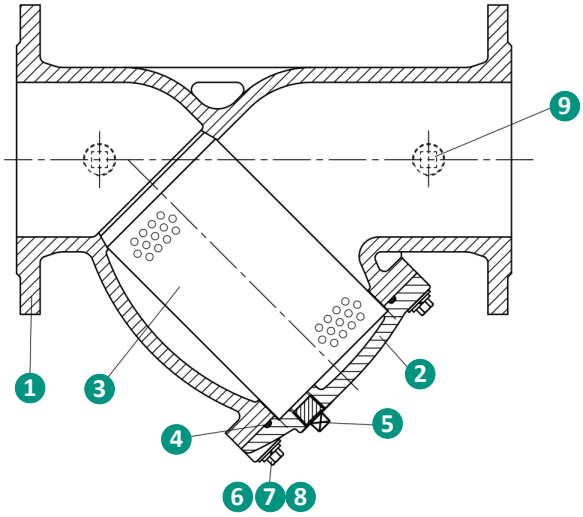

N°	Name	Material
1	Body	Ductile Iron EN-GJS-400 BS EN 1563
2	Cover	Ductile Iron EN-GJS-400 BS EN 1563
3	Screen	Stainless Steel BS EN 10088X5CrNi18-10
4	Sealing ring	WRAS EPDM
5	Drain plug	Stainless Steel BS EN 10088X5CrNi18-10
6	Bolt	Carbon Steel Galvanized EN 100083-2 C45
7	Spring Washer	Carbon Steel Galvanized EN 10132-4 C67S
8	Washer	Carbon Steel Galvanized EN 100083-2 C45
9	Test point plug R_1 1/4”*	Stainless Steel BS EN 10088X5CrNi18-10

**The test point plug R1 can be produced accc. to any request. Please note that the plug is not included in the standard strainer, only by request.*