FlowCon PIM-DP

Flanged Adjustable Differential Pressure Control Valve
50-150 mm - Patent pending

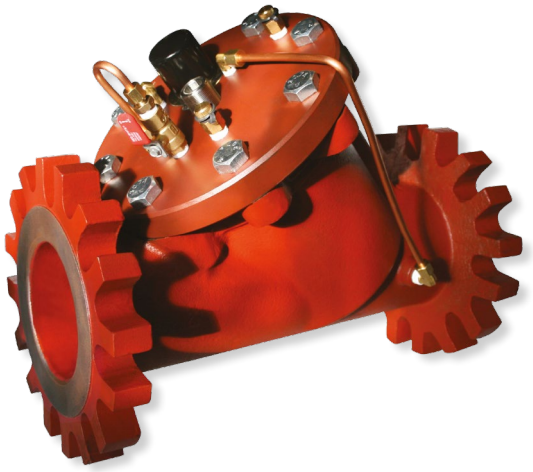

SPECIFICATIONS

Static pressure:	2500 kPa / 360 psi
Temperature rating, media:	-20ºC to +120ºC / -4ºF to +250ºF
Adjustable cap[1]:	Adjusted with 15mm / 1/2” Allen key
Material:	
- Body:	Cast Iron ASTM A395, 60-40-18
- Insert:	AISI type 304 stainless steel
- O-rings:	EPDM
- Diaphragm:	EPDM
- Capillary tube:	Cu
Maximum operational ΔP:	400 kPaD / 60 psid
Maximum close off pressure:	800 kPaD / 120 psid
Differential pressure range:	25 kPaD to 170 kPaD / 3.6 psid to 24.6 psid
End connections:	Universal flange connections which can be used with both ISO and ANSI Flanges and mounting kits are not supplied by FlowCon
Capillary tube:	1/4” tube, length: 1.5m, end connection: 1/4” ISO thread
Service:	Chilled water, hot water, up to 50% glycol or contact factory for additional fluids

Note 1: The Allen key should be turned slowly, approximately one turn every 10 seconds.

DIMENSIONS AND WEIGHTS (NOMINAL) (measured in mm unless noted)

Model no.	Valve size	Valve size (")	L	H1	H2	H3	D	Weight (kgs.)	Kv^2 (m^3/hr)
PIM-DP.3	50 65 80	2 2 1/2 3	261.6	165.5	94.4	260.0	94.4	10.56	68.8
PIM-DP.4	80 100	3 4	395.4	225.7	112.2	337.9	114.3	29.67	120.4
PIM-DP.5	125 150	5 6	466.3	289.8	138.8	428.5	138.8	47.60	258.0

Note 2: To determine flowrate at a specific kPaD the Kv calculation can be used. $Q=Kv*\sqrt{\Delta P}$.

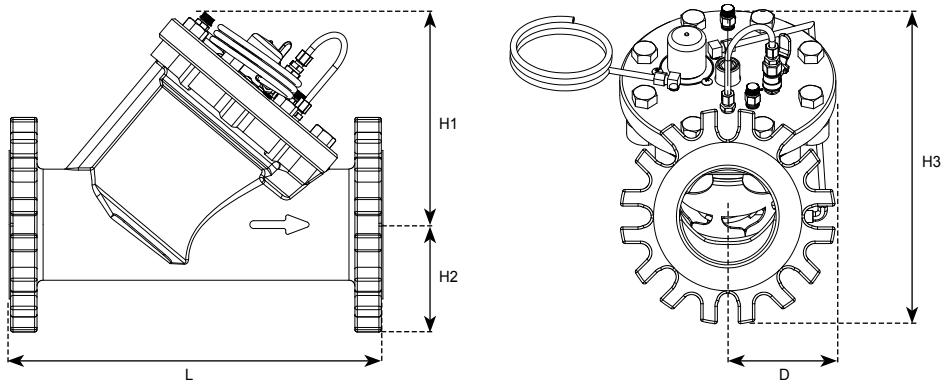

MODEL NUMBER SELECTION

PIM-DP._____ . _____

Insert valve size
3=50/65/80mm, 2-3" **4**=80/100mm, 3-4" **5**=125/150mm, 5-6"

T=Optional 3"x3" Aluminium hanging ID tag

Example: PIM-DP.3.T=FlowCon PIM 50/65/80mm with aluminium hanging tag.

GENERAL DESCRIPTION

The FlowCon PIM-DP series are a range of adjustable flanged cast iron differential pressure control valves. The purpose of the valve is to keep a constant differential pressure and thereby avoiding noise from the sub system, which the valve is controlling. Furthermore, the FlowCon PIM-DP can be used as a shut off valve.
The PIM-DP comes in 3 different housing covering sizes from 50 to 150mm. The range covers a differential pressure between 25-170 kPaD, which is adjusted by a 1/2" Allen key on the valve cap[3].

Note 3: The Allen Key should be turned slowly, approximately one turn every 10 seconds.

FLOW RATE TABLE

Flow range (±5%)				
Valve size (mm)	Max kPaD	Q Min (l/hr)	Q Max (l/hr)	Kv[4]
50/65/80	400	2270	32900	68,8
80/100	400	13630	82800	120.4
125/150	400	18170	119000	258

Note 4: To determine flow rate at a specific kPaD the Kv calculation can be used. $Q=Kv^{*}\sqrt{\Delta P}$

PUMP HEAD CALCULATIONS

FlowCon PIM-DP valve is to be selected based on the required flow rates and the calculated differential pressure across the controlled circuit (ΔpC) at design flow - see flow rate curves for reference.
The installed FlowCon PIM-DP will hereafter ensure that the differential pressure across the controlled circuit (ΔpC) is never superseding the set differential pressure + tolerances even at partial load conditions down to the minimum values listed.

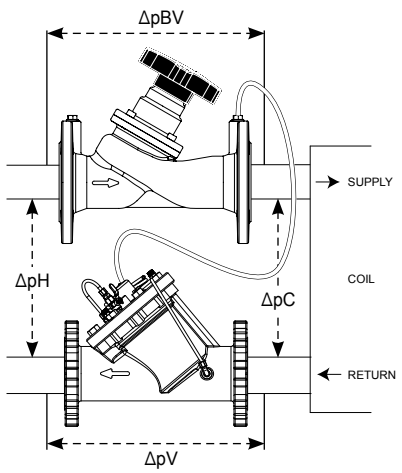

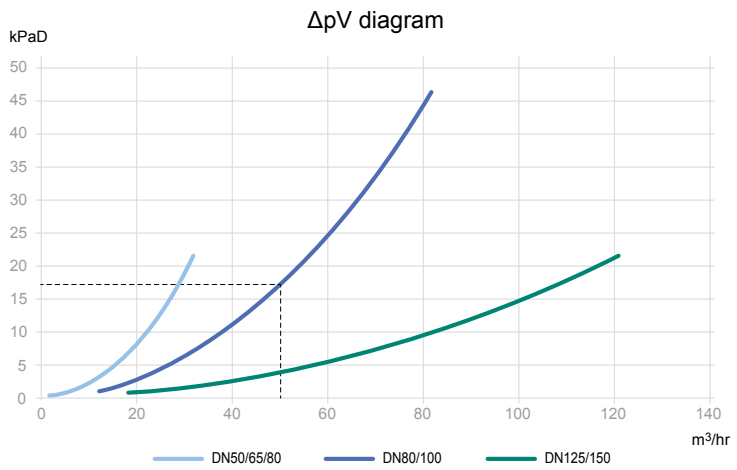

Example;
Design flow rate (Q_{design}) = 50 m³/hr
Pipe size = DN100
ΔpC = 25 kPaD

❶ **Select the valve model required:**
The DN100 PIM-DP can provide 82.8 m³/hr and matches both size and flow requirement. The Kv value of the DN100 valve is 120.4 m³/hr.

❷ **Calculate pressure loss across the DPCV (ΔpV):**
ΔpV is found either by referring to the ΔpV diagram above or by calculation using;
$(Q_{design} / Kvs)^2 * 100 = (50\ m^3/hr / 120.4\ m^3/hr)^2 * 100 = 17.25$ kPaD.

❸ **Calculate the pressure loss across the partner valve (ΔpBV):**
The pressure drop across the partner valve (ΔpBV) is now selected. In this example FlowCon Partner Globe is used as a partner valve holding a 14 kPaD differential pressure drop @ 50 m³/hr in DN100.

❹ **The minimum pump head is now defined:** ΔpH = ΔpBV + ΔpC + ΔpV => 14 + 25 + 17 = 54 kPaD.

ΔpH = Pump Pressure
ΔpBV = Pressure loss across partner valve
ΔpC = Differential pressure in system
ΔpV = Pressure loss across valve

GENERAL SPECIFICATIONS

1. DIFFERENTIAL PRESSURE CONTROL VALVES - FLOWCON PIM-DP

1.1. Contractor shall install the differential pressure control valves where indicated in drawings.

1.2. Valve shall be a mechanically operated, differential pressure control device, which shall accurately control differential pressure over a sub system independent of system fluctuation. No external discs allowed.

1.3. Valve housing shall be permanently marked to show direction of flow.

1.4. Differential pressure shall be available in 1 range for DN50 to DN150. The differential pressure setting shall be continuously adjustable within the range 25-170 kPaD. Valve shall be externally adjustable while in-line and the system in operation.

1.5. The valve shall be able to function as a shut-off valve meanwhile it will not function as a differential pressure control valve.

1.6. Valve housing shall consist off cast iron ASTM A395, 60-40-18, rated at no less than 2500 kPa static pressure and +120°C

1.7. Differential pressure regulation parts shall consist of stainless steel with EPDM diaphragm and sealing parts.

1.8. Pressure and temperature plugs shall be available for all valve for differential pressure verification.

1.9. The valve shall be serviceable by replacing/cleaning the filter in the adjustment tube.

2.0. Universal flange connections must be available for flexible pipe connections.

ACCESSORIES

- F4039-19: Brass tee, 1/4” NPT
- F6889: Pressure/temperature plug, 1/4” NPT
- F4039-11: 1/4” NPT x 0.25” straight capillary tube connection
- F4039-14: 1/4” NPT x 0.25” 90deg elbow capillary tube connection
- F212: 1.5m capillary tube
- F9645-075: Filter
- F9645-074: Flow restrictor
- ACC3391: Aluminium ID tag

APPLICATION AND SCHEMATIC EXAMPLE

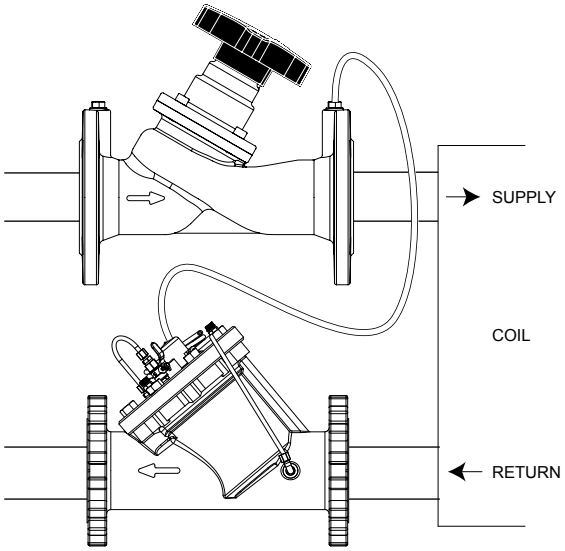

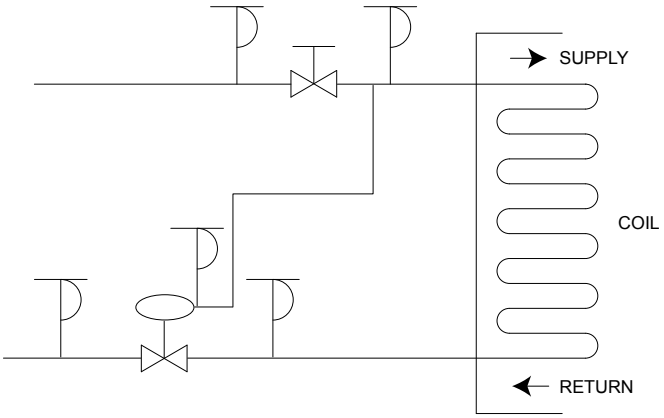

UPDATES

For latest updates please see www.flowcon.com