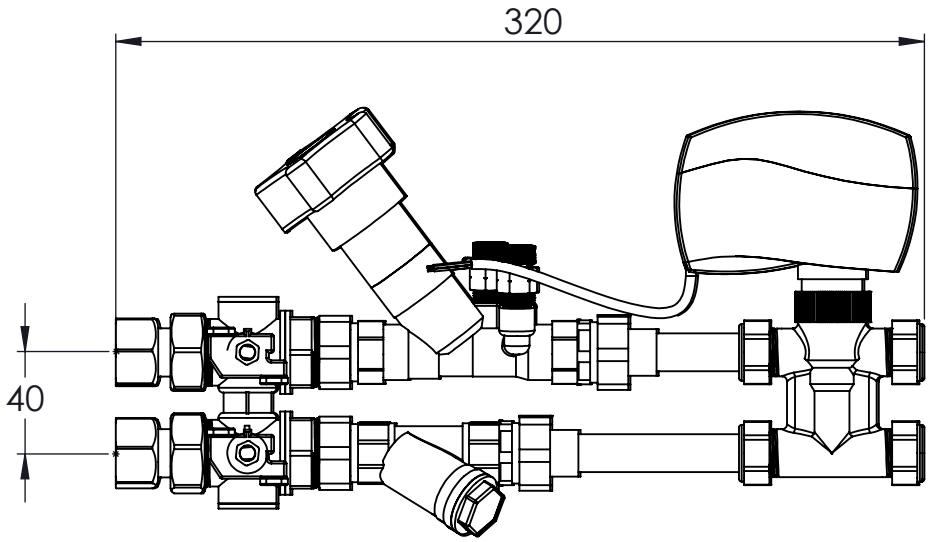

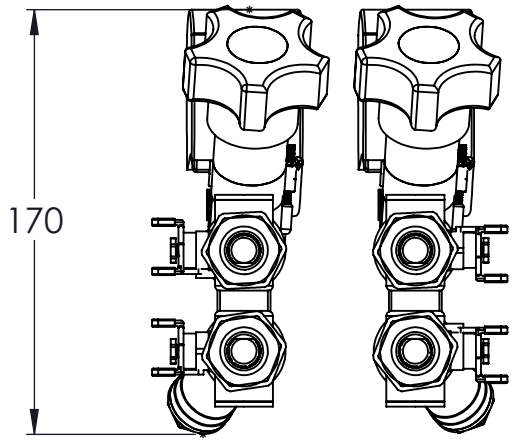

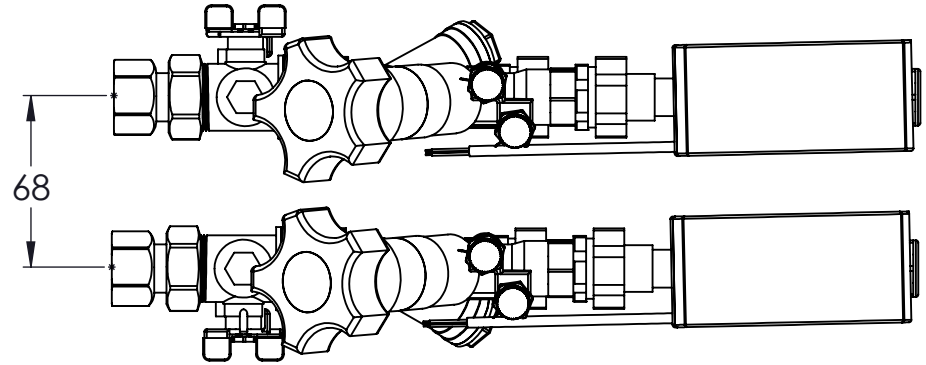

UNLESS OTHERWISE SPECIFIED, DIMENSIONS ARE IN MILLIMETERS		NAME	DATE
ANGULAR = ± °	DRAWN	Daniel Frain	06/09/2018
SURFACE FINISH √	CHECKED		
	APPROVED		
DO NOT SCALE DRAWING			
BREAK ALL SHARP EDGES AND REMOVE BURRS			
FIRST ANGLE PROJECTION	MATERIAL	FINISH	

FloControl

TITLE

##

SIZE	DWG NO.	REV.
A	##	

SCALE	WEIGHT	SHEET
1:5		1 Of 1