FlowCon A 15-25mm

Dynamic Balancing Valve - Adjustable Insert

SPECIFICATIONS

Pressure rating:	2500 kPa / 360 psi
Temperature rating, media:	-20°C to +120°C / -4°F to +248°F
Material:	
- Insert:	Composite inserts: POM (Polyoxymethylene) E-JUST inserts: PSU (Polysulfone)
- Diaphragm:	Hydrogenated acrylonitrile-butadiene-rubber or EPDM depending on type
- Body:	Forged brass ASTM CuZn40Pb2
- O-rings:	EPDM
End connections:	Fixed female ISO or NPT (DN25 is only available in ISO)
Flow rate range:	0.0081-0.408 l/sec (standard composite insert) 0.0278-0.352 l/sec (E-JUST insert)

DIMENSIONS AND WEIGHTS (NOMINAL) (measured in mm unless noted)

Valve size	Insert size	L	H1	H2	H3	Weight (kgs.)	Kv[1] (m^3/hr)
15	20	80	31	50	80	0.58	3.1
20						0.53	
25		91				0.56	

Note 1: For valve body.

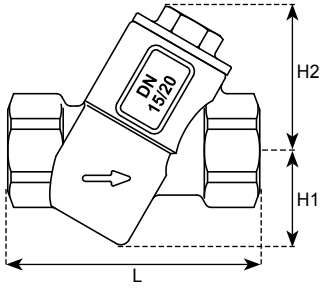

FlowCon A with composite insert

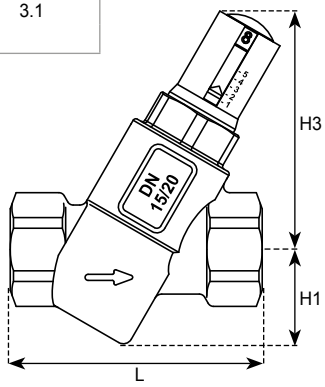

FlowCon A with E-JUST insert

MODEL NUMBER SELECTION[2]

A ____ . ____ . ____ . ____ . ____

Insert body size:
15=female threaded end 15mm **20**=female threaded end 20mm **25**=female threaded end 25mm

Insert connection standard:
I=ISO (15-20mm) **I.K**=ISO (25mm)

Insert a kPaD control range:
0 if no insert required
Y= 15-130 kPaD (standard composite insert)
17-200 kPaD (E-JUST red - white pawl)
17-210 kPaD (E-JUST black or green - white pawl)
G=30-400 kPaD (standard composite insert)
30-400 kPaD (E-JUST red - grey pawl)
35-400 kPaD (E-JUST black or green - grey pawl)
(Determine from insert selection chart)

Insert automatic flow limiting insert code:
0 if no insert required **Y**=grey **R**=red **U**=blue **B**=black **G**=green
(Determine from insert selection chart)

Insert insert dial setting/type:
1 to 8=dial setting on standard composite insert
0=standard pre-setting of 2 on standard composite insert
E=E-JUST insert
(Determine from insert selection chart)

Example: A20.I.Y.Y.0=A 20mm ISO female threaded body with a Y-type grey standard composite insert - pre-setting 2.

Note 2: Flow rate, color and dial setting of insert are indicated on label affixed to body.

FLOW RATE SETTING - COMPOSITE INSERT - FOR VALVES DN15-DN25

20mm · 3/4" · composite insert · Y-type								
Pressure range, ΔP: 20-130 kPaD (15-130 kPaD)* · 2.9-18.9 psid (2.2-18.9 psid)*								
			Model no.	**ABV1.Y.Y**	**ABV1.Y.R**	**ABV1.Y.U**	**ABV1.Y.B**	**ABV1.Y.G**
Nominal flow rate	l/sec	l/hr	GPM	Grey*	Red	Blue	Black	Green
	0.0081	29.2	0.128	1				
	0.0133	47.9	0.211	2				
	0.0175	63.0	0.277	3				
	0.0222	79.9	0.352	4				
	0.0311	112	0.493	5				
	0.0353	127	0.560	6				
	0.0383	138	0.607	7				
	0.0431	155	0.683	8				
	0.0450	162	0.713				3	
	0.0575	207	0.911		4			
	0.0619	223	0.981			4		
	0.0669	241	1.06				4	
	0.0922	332	1.46		5			
	0.0978	352	1.55					1
	0.105	378	1.66		6			
	0.114	409	1.80		7			
	0.115	415	1.83			5		
	0.118	426	1.88					2
	0.119	430	1.89		8			
	0.136	489	2.15					3
	0.137	492	2.17			6		
	0.138	498	2.19					4
	0.146	524	2.31			7		
	0.146	526	2.32			8		
	0.155	557	2.45				5	
	0.176	635	2.80				6	
	0.180	647	2.85				7	
	0.193	695	3.06				8	
	0.231	830	3.66					5
	0.237	854	3.76					6
	0.253	909	4.00					7
	0.273	984	4.33					8

Accuracy: Greatest of either ±10% of controlled flow rate or 20 l/hr (0.0056 l/sec or 0.088 GPM).

20mm · 3/4" · composite insert · G-type								
Pressure range, ΔP: 40-400 kPaD (30-400 kPaD)* · 5.8-58 psid (4.4-58 psid)*								
			Model no.	**ABV1.G.Y**	**ABV1.G.R**	**ABV1.G.U**	**ABV1.G.B**	**ABV1.G.G**
Nominal flow rate	l/sec	l/hr	GPM	Grey*	Red	Blue	Black	Green
	0.0117	42.1	0.185	1				
	0.0189	68.0	0.300	2				
	0.0247	88.9	0.392	3				
	0.0325	117	0.515	4				
	0.0472	170	0.748	5				
	0.0528	190	0.837	6				
	0.0564	203	0.894			3		
	0.0597	215	0.946				3	
	0.0639	230	1.01	7				
	0.0694	250	1.10	8				
	0.0781	281	1.24		4			
	0.0908	327	1.44			4		
	0.0958	345	1.52				4	
	0.137	493	2.17		5			
	0.147	529	2.33					1
	0.161	581	2.56		6			
	0.173	624	2.75		7			
	0.181	652	2.87			5		
	0.181	653	2.88		8			
	0.186	670	2.95					2
	0.210	755	3.32					3
	0.216	779	3.43			6		
	0.218	785	3.46			7		
	0.220	792	3.49			8		
	0.237	853	3.75				5	
	0.241	869	3.83					4
	0.266	957	4.21				6	
	0.269	968	4.26				7	
	0.277	998	4.39				8	
	0.365	1320	5.79					5
	0.369	1330	5.85					6
	0.392	1410	6.21					7
	0.408	1470	6.46					8

Accuracy: Greatest of either ±10% of controlled flow rate or 20 l/hr (0.0056 l/sec or 0.088 GPM).

FLOW RATE SETTING - E-JUST INSERT - FOR VALVES DN15-DN25

20mm · 3/4" · E-JUST · Y-type · White pawl					
Pressure range, ΔP: 17-210 kPaD · 2.5-30 psid					
			Model no.	E-JUST1.Y.B	E-JUST1.Y.G
				Black	Green
	l/sec	l/hr	GPM	Setting	Setting
Nominal flow rate	0.0278	100	0.440	1.0	
	0.0299	108	0.475	1.1	
	0.0321	116	0.509	1.2	
	0.0343	123	0.543	1.3	
	0.0364	131	0.578	1.4	
	0.0386	139	0.612	1.5	
	0.0408	147	0.646	1.6	
	0.0429	155	0.681	1.7	
	0.0436	157	0.691		1.0
	0.0451	162	0.715	1.8	
	0.0468	168	0.741		1.1
	0.0473	170	0.749	1.9	
	0.0494	178	0.784	2.0	
	0.0499	180	0.791		1.2
	0.0516	186	0.818	2.1	
	0.0530	191	0.841		1.3
	0.0538	194	0.852	2.2	
	0.0559	201	0.887	2.3	
	0.0562	202	0.890		1.4
	0.0581	209	0.921	2.4	
	0.0593	214	0.940		1.5
	0.0603	217	0.955	2.5	
	0.0624	225	0.990	2.6	1.6
	0.0646	233	1.02	2.7	
	0.0656	236	1.04		1.7
	0.0668	240	1.06	2.8	
	0.0687	247	1.09		1.8
	0.0689	248	1.09	2.9	
	0.0711	256	1.13	3.0	
	0.0719	259	1.14		1.9
	0.0733	264	1.16	3.1	
	0.0750	270	1.19		2.0
	0.0754	272	1.20	3.2	
	0.0776	279	1.23	3.3	
	0.0781	281	1.24		2.1
	0.0798	287	1.26	3.4	
	0.0813	293	1.29		2.2
	0.0819	295	1.30	3.5	
	0.0841	303	1.33	3.6	
	0.0844	304	1.34		2.3
	0.0863	311	1.37	3.7	
	0.0876	315	1.39		2.4
	0.0884	318	1.40	3.8	

Continue next column...

20mm · 3/4" · E-JUST · Y-type · White pawl					
Pressure range, ΔP: 17-210 kPaD · 2.5-30 psid					
			Model no.	E-JUST1.Y.B	E-JUST1.Y.G
				Black	Green
	l/sec	l/hr	GPM	Setting	Setting
Nominal flow rate	0.0906	326	1.44	3.9	
	0.0907	327	1.44		2.5
	0.0928	334	1.47	4.0	
	0.0938	338	1.49		2.6
	0.0949	342	1.50	4.1	
	0.0970	349	1.54		2.7
	0.0971	350	1.54	4.2	
	0.0993	357	1.57	4.3	
	0.100	360	1.59		2.8
	0.101	365	1.61	4.4	
	0.103	372	1.64		2.9
	0.104	373	1.64	4.5	
	0.106	381	1.68	4.6	
	0.106	383	1.69		3.0
	0.108	389	1.71	4.7	
	0.110	394	1.74		3.1
	0.110	396	1.75	4.8	
	0.112	404	1.78	4.9	
	0.113	406	1.79		3.2
	0.114	412	1.81	5.0	
	0.116	417	1.84		3.3
	0.119	428	1.89		3.4
	0.122	440	1.94		3.5
	0.125	451	1.98		3.6
	0.128	462	2.03		3.7
	0.132	473	2.08		3.8
	0.135	485	2.13		3.9
	0.138	496	2.18		4.0
	0.141	507	2.23		4.1
	0.144	519	2.28		4.2
	0.147	530	2.33		4.3
	0.150	541	2.38		4.4
	0.153	553	2.43		4.5
	0.157	564	2.48		4.6
	0.160	575	2.53		4.7
	0.163	586	2.58		4.8
	0.166	598	2.63		4.9
	0.169	609	2.68		5.0

Accuracy: Greatest of
either ±5% of controlled flow rate
or ±2% of maximum flow rate

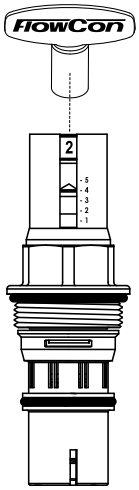

Use the FlowCon adjustment key (part number ACC0001) for adjusting the flow rate.

A setting of 4.2 corresponds to a flow rate of 0.144 l/sec for the 20mm green insert, range 17-210 kPaD.

FLOW RATE SETTING - E-JUST INSERT - FOR VALVES DN15-DN25 (continued)

20mm · 3/4” · E-JUST · Y-type · White pawl			
Pressure range. ΔP: 17-200 kPaD · 2.5-29 psid			
			Model no. E-JUST1.Y.R
			Red
	l/sec	l/hr	GPM	Setting
Nominal flow rate	0.0767	276	1.22	1.0
	0.0813	293	1.29	1.1
	0.0860	310	1.36	1.2
	0.0907	326	1.44	1.3
	0.0953	343	1.51	1.4
	0.100	360	1.58	1.5
	0.105	377	1.66	1.6
	0.109	393	1.73	1.7
	0.114	410	1.80	1.8
	0.118	426	1.88	1.9
	0.123	443	1.95	2.0
	0.128	459	2.02	2.1
	0.132	475	2.09	2.2
	0.136	491	2.16	2.3
	0.141	507	2.23	2.4
	0.145	523	2.30	2.5
	0.150	539	2.37	2.6
	0.154	554	2.44	2.7
	0.158	569	2.51	2.8
	0.162	584	2.57	2.9
	0.166	599	2.64	3.0
	0.170	614	2.70	3.1
	0.174	628	2.76	3.2
	0.178	642	2.83	3.3
	0.182	655	2.89	3.4
	0.186	669	2.94	3.5
	0.189	682	3.00	3.6
	0.193	695	3.06	3.7
	0.196	707	3.11	3.8
	0.200	719	3.17	3.9
	0.203	731	3.22	4.0
	0.206	742	3.27	4.1
	0.209	753	3.32	4.2
	0.212	764	3.36	4.3
	0.215	774	3.41	4.4
	0.218	784	3.45	4.5
	0.220	793	3.49	4.6
	0.223	802	3.53	4.7
	0.225	810	3.57	4.8
	0.227	818	3.60	4.9
	0.229	825	3.60	5.0

Accuracy: Greatest of
either ±5% of controlled flow rate
or ±2% of maximum flow rate

20mm · 3/4” · E-JUST · G-type · Grey pawl			
Pressure range. ΔP: 30-400 kPaD · 4.4-58 psid			
			Model no. E-JUST1.G.R
			Red
	l/sec	l/hr	GPM	Setting
Nominal flow rate	0.113	406	1.79	1.0
	0.119	427	1.88	1.1
	0.125	449	1.98	1.2
	0.131	470	2.07	1.3
	0.137	492	2.17	1.4
	0.143	513	2.26	1.5
	0.149	535	2.36	1.6
	0.155	556	2.45	1.7
	0.161	578	2.54	1.8
	0.167	599	2.64	1.9
	0.172	621	2.73	2.0
	0.178	642	2.83	2.1
	0.184	664	2.92	2.2
	0.190	685	3.02	2.3
	0.196	707	3.11	2.4
	0.202	728	3.21	2.5
	0.208	750	3.30	2.6
	0.214	771	3.40	2.7
	0.220	793	3.49	2.8
	0.226	814	3.59	2.9
	0.232	836	3.68	3.0
	0.238	857	3.78	3.1
	0.244	879	3.87	3.2
	0.250	900	3.96	3.3
	0.256	922	4.06	3.4
	0.262	943	4.15	3.5
	0.268	965	4.25	3.6
	0.274	987	4.34	3.7
	0.280	1010	4.44	3.8
	0.286	1030	4.53	3.9
	0.292	1050	4.63	4.0
	0.298	1070	4.72	4.1
	0.304	1090	4.82	4.2
	0.310	1120	4.91	4.3
	0.316	1140	5.01	4.4
	0.322	1160	5.10	4.5
	0.328	1180	5.20	4.6
	0.334	1200	5.29	4.7
	0.340	1220	5.38	4.8
	0.346	1240	5.48	4.9
	0.352	1270	5.57	5.0

Accuracy: Greatest of
either ±5% of controlled flow rate
or ±2% of maximum flow rate

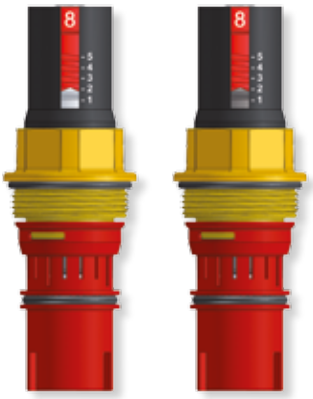

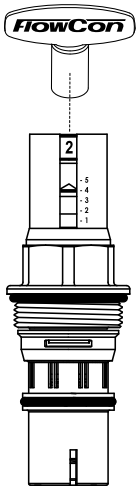

Use the FlowCon adjustment key (part number ACC0001) for adjusting the flow rate.

A setting of 4.2 corresponds to a flow rate of 0.304 l/sec for the 20mm red insert, range 30-400 kPaD.

FLOW RATE SETTING - E-JUST INSERT - FOR VALVES DN15-DN25 (continued)

20mm · 3/4" · E-JUST · G-type · Grey pawl					
Pressure range, ΔP: 35-400 kPaD · 5.1-58 psid					
			Model no.	E-JUST1.G.B	E-JUST1.G.G
				Black	Green
	l/sec	l/hr	GPM	Setting	Setting
Nominal flow rate	0.0383	138	0.607	1.0	
	0.0416	150	0.660	1.1	
	0.0449	162	0.712	1.2	
	0.0483	174	0.765	1.3	
	0.0516	186	0.817	1.4	
	0.0549	198	0.870	1.5	
	0.0582	210	0.922	1.6	
	0.0615	221	0.975	1.7	
	0.0648	233	1.03	1.8	
	0.0660	238	1.05		1.0
	0.0681	245	1.08	1.9	
	0.0706	254	1.12		1.1
	0.0714	257	1.13	2.0	
	0.0748	269	1.18	2.1	
	0.0751	271	1.19		1.2
	0.0781	281	1.24	2.2	
	0.0797	287	1.26		1.3
	0.0814	293	1.29	2.3	
	0.0843	304	1.34		1.4
	0.0847	305	1.34	2.4	
	0.0880	317	1.40	2.5	
	0.0889	320	1.41		1.5
	0.0913	329	1.45	2.6	
	0.0934	336	1.48		1.6
	0.0946	341	1.50	2.7	
	0.0979	353	1.55	2.8	
	0.0980	353	1.55		1.7
	0.101	365	1.61	2.9	
	0.103	369	1.63		1.8
	0.105	377	1.66	3.0	
	0.107	386	1.70		1.9
	0.108	388	1.71	3.1	
	0.111	400	1.76	3.2	
	0.112	402	1.77		2.0
	0.115	412	1.82	3.3	
	0.116	419	1.84		2.1
	0.118	424	1.87	3.4	
	0.121	435	1.92		2.2
	0.121	436	1.92	3.5	
	0.124	448	1.97	3.6	
	0.125	452	1.99		2.3
	0.128	460	2.03	3.7	
	0.130	468	2.06		2.4
	0.131	472	2.08	3.8	

Continue next column...

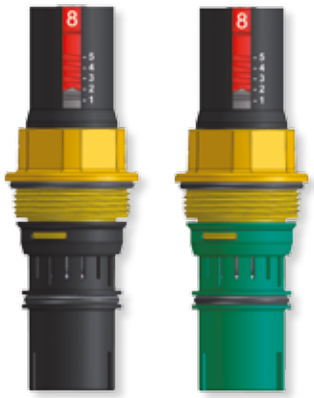

20mm · 3/4" · E-JUST · G-type · Grey pawl					
Pressure range, ΔP: 35-400 kPaD · 5.1-58 psid					
			Model no.	E-JUST1.G.B	E-JUST1.G.G
				Black	Green
	l/sec	l/hr	GPM	Setting	Setting
Nominal flow rate	0.134	484	2.13	3.9	
	0.135	485	2.13		2.5
	0.138	496	2.18	4.0	
	0.139	501	2.21		2.6
	0.141	508	2.24	4.1	
	0.144	517	2.28		2.7
	0.144	520	2.29	4.2	
	0.148	532	2.34	4.3	
	0.148	534	2.35		2.8
	0.151	544	2.39	4.4	
	0.153	550	2.42		2.9
	0.154	556	2.45	4.5	
	0.157	567	2.50		3.0
	0.158	567	2.50	4.6	
	0.161	579	2.55	4.7	
	0.162	583	2.57		3.1
	0.164	591	2.60	4.8	
	0.167	600	2.64		3.2
	0.168	603	2.66	4.9	
	0.171	615	2.71	5.0	
	0.171	616	2.71		3.3
	0.176	633	2.79		3.4
	0.180	649	2.86		3.5
	0.185	666	2.93		3.6
	0.189	682	3.00		3.7
	0.194	699	3.08		3.8
	0.199	715	3.15		3.9
	0.203	731	3.22		4.0
	0.208	748	3.29		4.1
	0.212	764	3.37		4.2
	0.217	781	3.44		4.3
	0.221	797	3.51		4.4
	0.226	814	3.58		4.5
	0.231	830	3.66		4.6
	0.235	847	3.73		4.7
	0.240	863	3.80		4.8
	0.244	880	3.87		4.9
	0.249	896	3.95		5.0

Accuracy: Greatest of
either ±5% of controlled flow rate
or ±2% of maximum flow rate

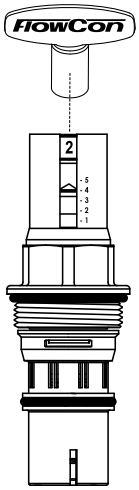

Use the FlowCon adjustment key (part number ACC0001) for adjusting the flow rate.

A setting of 4.2 corresponds to a flow rate of 0.212 l/sec for the 20mm green insert, range 35-400 kPaD.

ACCESSORIES

- Blind cap: ACC0080 (cap without an insert for flushing out the system)
- Adjustment key: ACC0001 (key for adjusting the flow rate on E-JUST inserts).

GENERAL SPECIFICATIONS

1. AUTOMATIC BALANCING VALVES - FLOWCON A

1.1. Contractor shall install automatic balancing valves where indicated in drawings.
1.2. Valve shall consist of dynamic, accessible, adjustable flow limiting device.

2. VALVE HOUSING

2.1. Valve housing shall consist of forged brass ASTM CuZn40Pb2, rated at no less than 2500 kPa static pressure and +120°C.
2.2. Valve housing shall be permanently marked to show direction of flow.
2.3. Housing shall be configured for flow regulation unit accessibility.

3.a. FLOW REGULATOR / AUTOMATIC BALANCING UNIT / <u>COMPOSITE INSERT</u>

3.a.1. Flow regulation unit assembly shall be manufactured of polyoxymethylene with a hydrogenated acrylonitrile-butadiene rubber or EPDM diaphragm and stainless steel 18-8 spring.
3.a.2. Flow regulation unit shall be readily accessible for change-out or maintenance.
3.a.3. Flow regulation unit shall be adjustable to 1 of 8 different flow rates and shall be available in 2 different kPaD operational ranges; minimum range shall be capable of being activated by minimum 15 kPaD. Further, the flow regulation unit shall be capable of controlling the flow within ±10% of rated flow rate or 20l/hr.
3.a.4. Identification tags shall be available for all valves; tags shall be indelibly marked with flow rate, color and dial setting.

OR…

3.b. FLOW REGULATOR / AUTOMATIC BALANCING UNIT / <u>E-JUST INSERT</u>

3.b.1. Flow regulation unit assembly shall be manufactured of polysulfone with a hydrogenated acrylonitrile-butadiene rubber or EPDM diaphragm and stainless steel 18-8 spring.
3.b.2. Flow regulation unit shall be readily accessible for change-out or maintenance.
3.b.3. Flow regulation unit shall be adjustable with the valve in-line and the system in operation.
3.b.4. Flow regulation unit shall be externally adjustable to 1 of 41 different flow rates; shall be available in 4 different kPaD operational ranges for minimum range shall be capable of being activated by minimum 17 kPaD. Further, the flow regulation unit shall be capable of controlling flow within ±5% of rated flow or ±2% of maximum flow.
3.b.5. Identification tags shall be available for all valves; tags shall be indelibly marked with flow rate, color and dial setting.

APPLICATION AND SCHEMATIC EXAMPLE

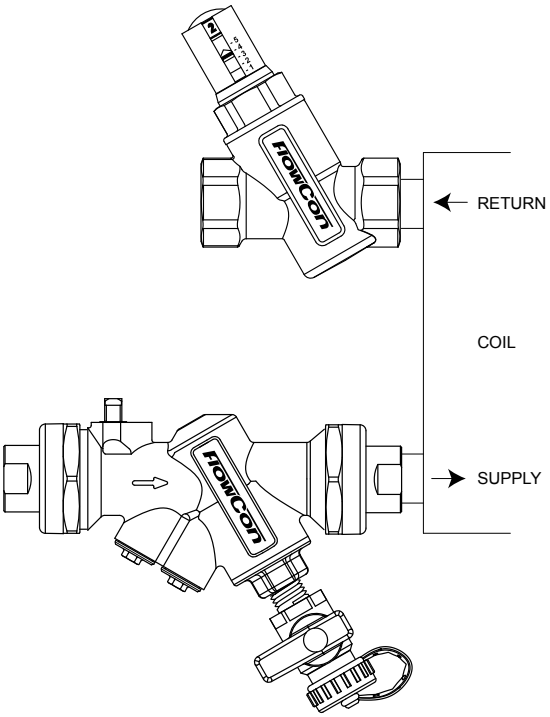

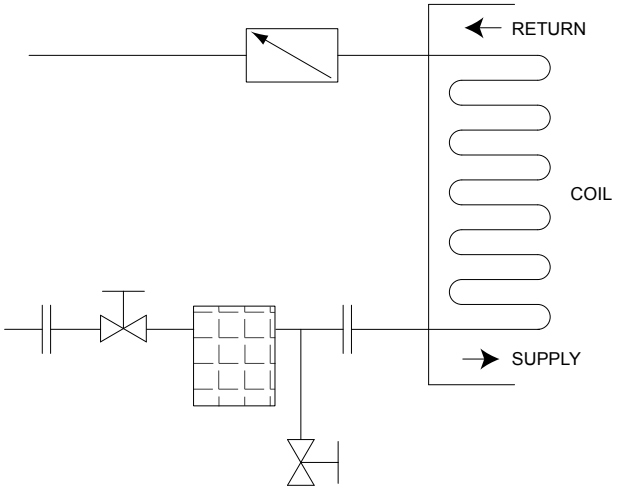

UPDATES

For latest updates please see www.flowcon.com

FlowCon International can accept no responsibility for possible errors in any printed material.
All rights reserved.